FURUNO

INMARSAT MINI-C MOBILE EARTH STATION
FELCOM 16
Installation Manual

TABLE OF CONTENTS

EQUIPMENT LISTS ..... **iii**

SYSTEM CONFIGURATION ..... **iv**

1. MOUNTING THE UNIT **1**
- 1.1 Antenna Unit 1
- 1.2 Communication Unit 7
- 1.3 AC/DC Power Supply Unit PR-240 (option) 7

2. WIRING **8**
- 2.1 Antenna Cable Connector at the Terminal Unit 9

3. SETTINGS AFTER THE INSTALLATION **11**
- 3.1 Installing software 11
- 3.2 Setting the IMN (Inmarsat Mobile No.) 15

4. CHANGING POWER SUPPLY SPECIFICATIONS **16**

PACKING LISTS **A-1**

OUTLINE DRAWINGS **D-1**

INTERCONNECTION DIAGRAM **S-1**

FURUNO ELECTRIC CO., LTD.

www.furuno.co.jp

All brand and product names are trademarks, registered trademarks or service marks of their respective holders.

⚠ SAFETY INSTRUCTIONS

⚠ WARNING

ELECTRICAL SHOCK HAZARD

Do not open the equipment unless totally familiar with electrical circuits and service manual.

Only qualified personnel should work inside the equipment.

Do not approach the radome closer than 60 cm when it is transmitting.

Microwave radiation can cause severe injury or illness.
Radiation level:
10 W/m² at 60 cm

Turn off the power at the mains switchboard before beginning the installation. Post a sign near the switch to indicate it should not be turned on while the equipment is being installed.

Fire, electrical shock or serious injury can result if the power is left on or is applied while the eqiuipment is being installed.

⚠ CAUTION

Confirm that the power supply voltage is compatible with the voltage rating of the equipment.

Connection to the wrong power supply can cause fire or equipment damage. The voltage rating appears on the label at the rear of the communication unit.

Use the correct fuse.

Use 10 A fuse (defalt setting) for 12 VDC power supply, or replace the fuse to 5 A (supplied as spare parts) with 24 VDC.

Use of wrong fuse can result in damage to the equipment.

Keep the following compass safe distances.

	Standard	Steering
Antenna Unit IC-116	0.3 m	0.3 m
Communication Unit IC-216	0.3 m	0.3 m
AC/DC Power Supply Unit PR-240	0.9 m	0.6 m

Attach securely protection earth to the ship's body.

The protection earth is required to the power supply to prevent electrical shock

EQUIPMENT LISTS

Standard Supply

Name	Type	Code No.	Qty	Remarks
Antenna Unit	IC-116	-	1	
Communication Unit	IC-216	-	1	
Junction Box*	IC-315	-	1	w/CP16-02501
SSAS Alert Unit*	IC-307	-	2	w/CP16-03101, FP16-00901
Installation Materials	CP16-02101	004-439-060	1 set	For 15/30 m antenna cable**
	CP16-02111	004-439-070		For 50 m antenna cable**
	CP16-02121	004-439-080		For 100 m antenna cable**
	TP58A15W-RG58	000-146-252	1	15 m antenna cable
	TP5FBAW-5DFBB	000-146-250		30 m antenna cable
	8D-FB-CV	000-117-599		50 m antenna cable
	12D-SFA-CV	000-138-866		100 m antenna cable
	CP16-02401	004-439-540		For communication unit**
Accessories	FP16-00700	004-439-550	1 set	FD-ROM, FD (FP16-00601)
Spare Parts	SP16-01401	004-439-530	1 set	Fuse**

Optional Supply

Name	Type	Code No.	Qty	Remarks
Cable assy	17JE-573-10	000-127-108	1	For PC connecting
AC/DC Power Supply Unit	PR-240	-	1 set	w/CP24-00151**
5-pair cable	CO-SPEVV-SB-C 0.2x5P	000-560-452	1	For junction box, 10m
		000-103-868		For junction box, 20m
		000-103-869		For junction box, 30m
		000-132-829		For junction box, 40m
		000-132-828		For junction box, 50m
SSAS Alert Unit	IC-307	000-043-473	1	w/CP16-03101, FP16-00901
Flush Mounting Kit	OP16-28	004-448-010	1	For SSAS alert unit
FFA Modification Kit**	OP16-69	004-448-860	1 set	
PC Terminal Software	OP16-46	004-450-750	1	Russian Language
Antenna Mounting Kit	CP16-03701	004-555-000	1 set	
Antenna Bracket	CP16-03702	001-016-260	1	See page D-5.
Antenna Mounting Pipe	CP16-03703	001-014-510	1	

*: SSAS Specification only.

**: See packing lists at the back of this manual.

SYSTEM CONFIGURATION

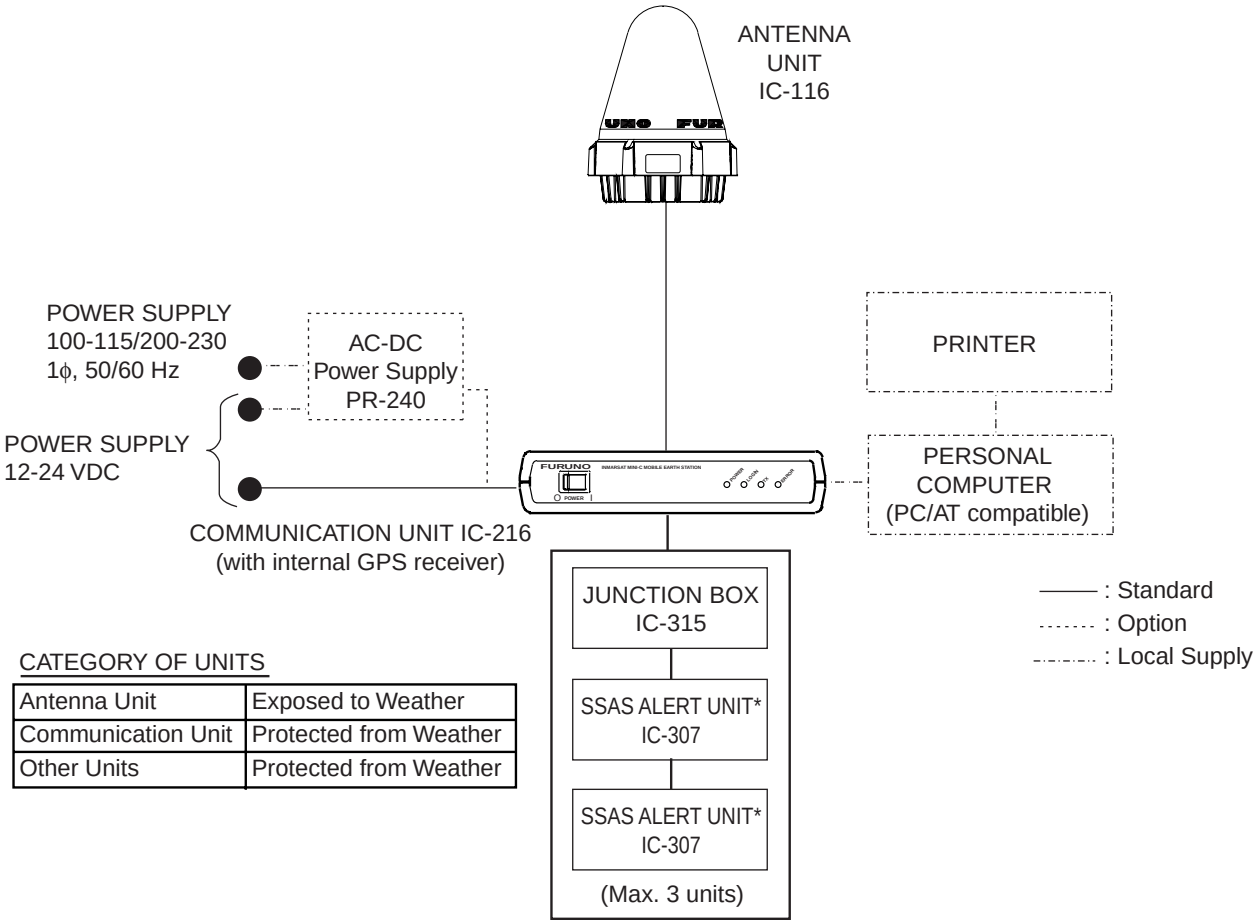

CATEGORY OF UNITS

Antenna Unit	Exposed to Weather
Communication Unit	Protected from Weather
Other Units	Protected from Weather

*: At least two SSAS Alert Units are required.

This page is intentionally left blank.

1. MOUNTING THE UNIT

NOTICE

Do not apply paint, anti-corrosive sealant or contact spray to coating or plastic parts of the equipment.

Those items contain organic solvents that can damage coating and plastic parts, especially plastic connectors.

1.1 Antenna Unit

Mounting Location

- There should be no interfering object within the line-of-sight to the satellite. Objects within line-of-sight to a satellite, for example, a mast may block transmission/reception. Mount the antenna unit as high as possible. This keeps it free of interfering objects and water spray. The location should be well away from a GPS antenna. A GPS receiver may be interfered by the Inmarsat C wave.
- If both Inmarsat-B or F ship earth stations are installed, separate the Inmarsat-B/F antenna at least 8 m.
- Separate the antenna unit from an S-band radar as follows:

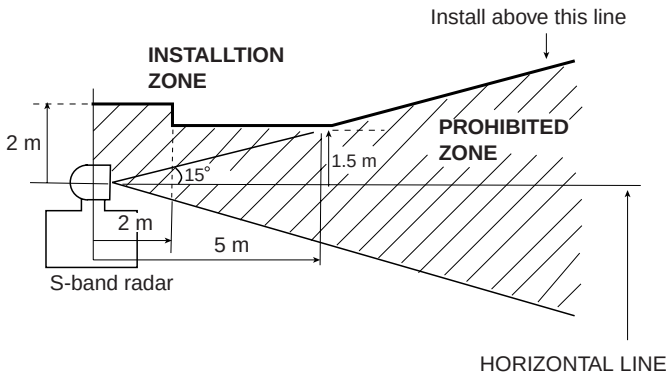

S-band radar and installation area

- The allowable vibration level as specified by Inmarsat is as shown in the table below.

Allowable vibration level

Frequency	Level
2 to 10 Hz	2.54 mm Peak Amplitude
10 to 100 Hz	9.8 m/s² Peak Acceleration

- Avoid the location near funnels and stacks; smoke and soot on the radome can lower signal level.
- Separate the antenna unit 5 m from HF, VHF or 27 MHz antenna.

Mounting

Fifteen, 30, 50 or 100 m antenna cable is available. Fifteen and 30 m cable has connectors on both ends, and one connector for 50/100 m cable. **Do not shorten these cables, to prevent interference**. To mount the antenna unit, an exclusive pipe is necessary.

Note: To mount the antenna unit with the optional antenna mounting kit (Type: CP16-03701, Code No.: 004-555-000), see page D-4.

Locally prepare an antenna mast with a ground stud (M6 stainless steel bolt welded to antenna mast) and mounting pipe with threads and plate (See the outline drawing of the mounting plate shown below.) Weld the mounting pipe to the antenna mast.
The distance between the stud and the earth terminal on the antenna unit should be within 340 mm, which also is the length of the supplied ground wire.

Note: Use of the mounting pipe (FURUNO supply or the equivalent) is mandatory in case of FFA version. See the equipment list at the beginning of this manual for information.

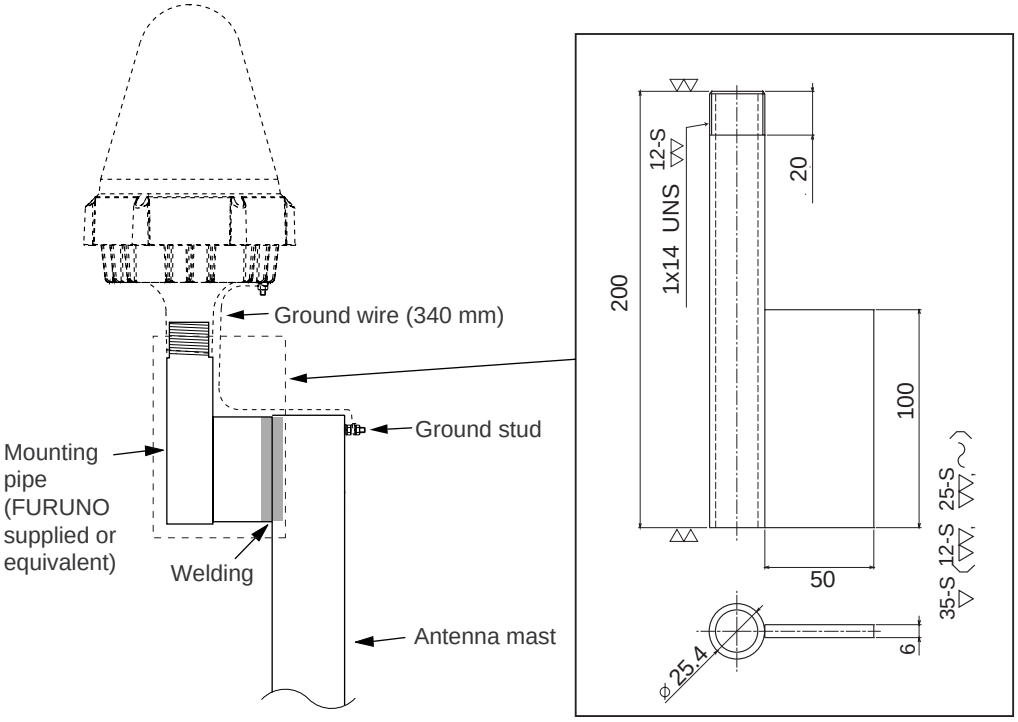

Mounting pipe and antenna mast

For 15 or 30 m cable

1. Apply silicone sealant (local supply) to the threads of the pipe.
2. Unscrew three screws to remove the antenna base from the antenna unit.
3. Pass the antenna cable through the pipe, antenna base in order.
4. Insert the cable protector (supplied) into the slot at the bottom of antenna base.
5. Screw the antenna base onto the antenna pipe by rotating the antenna base.
6. Pass the antenna cable through the shrink tube (SCM2, supplied).
7. Attach the antenna cable to the connector at the bottom of the antenna unit (upper).
8. Slide up the shrink tube until it touches the bottom of the antenna unit (upper).
9. Heat the above shrink tube, and then apply silicone rubber around the upper edge of the tube. Also wind self-bonding tape around the lower edge of the shrink tube and then wrap vinyl tape over self-bonding tape.

Note: Between the bottom of the antenna unit (upper) and the end of the taping should be less than 50 mm.

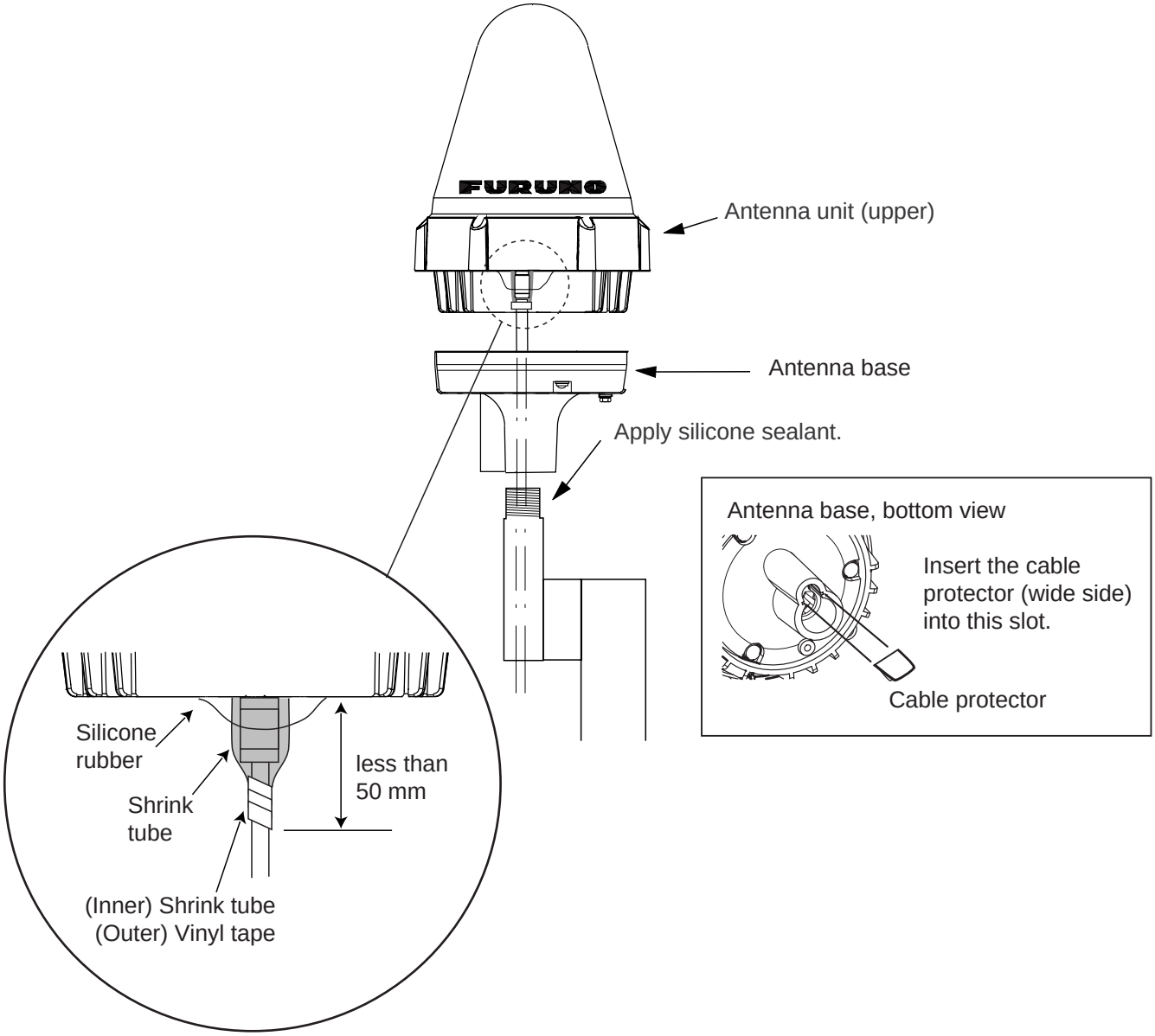

Antenna unit, passing the cable through the pipe

10. Wrap self-bonding tape around the connection of antenna base and pipe, and then wind vinyl tape over self-bonding tape.
11. Remount the antenna unit (upper) on the antenna base. (Torque: 2.6 N·m ± 10%)
12. Fix the ground wire RW-4747 (supplied) between the ground terminal on the antenna unit and the ship's ground point.

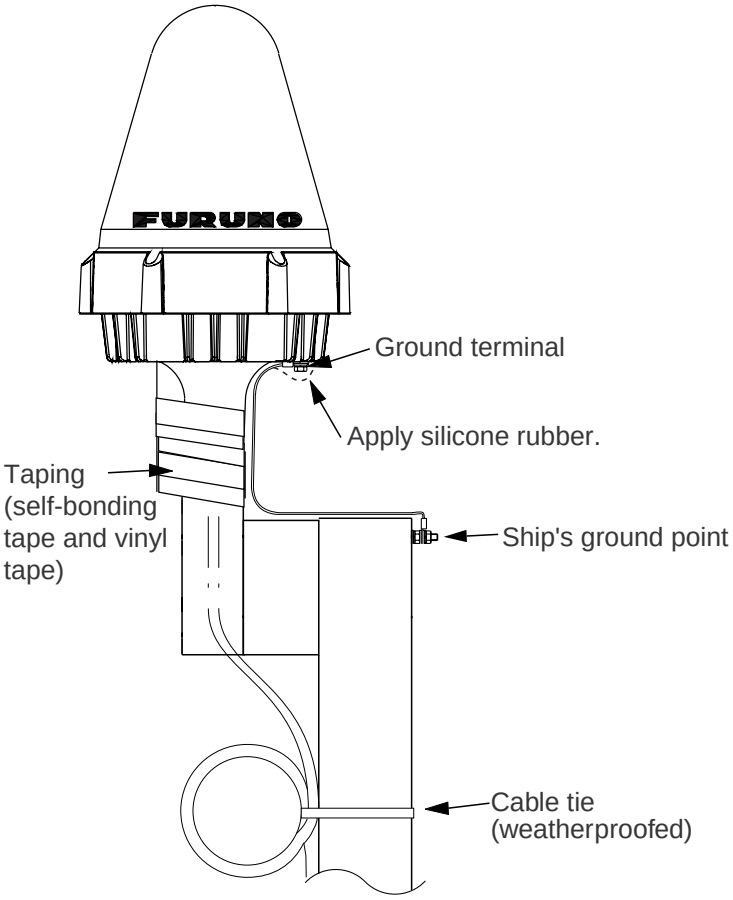

Mounting

13. Apply silicone rubber (supplied) to the ground terminal and three screws at the bottom of antenna base.
14. Fix the antenna cable to the mast with a cable tie (local supply).

For 50 or 100 m cable

1. Apply silicone sealant (local supply) to the threads of the pipe.
2. Unscrew three screws to remove the antenna base from the antenna unit.
3. Pass the cable assy TPA5FB0.3NJ5FBA-5DFB (supplied, 300 mm) through the shrink tube (SCM2, supplied).
4. Attach the above cable assy to the connector at the bottom of the antenna unit (upper).
5. Slide up the shrink tube until it touches the bottom of the antenna unit (upper).
6. Heat the shrink tube, and then apply silicone rubber around the upper edge of the tube, also wind self-bonding tape around the lower edge of the shrink tube and then wrap vinyl tape over self-bonding tape.

Note: Between the bottom of the antenna unit (upper) and the end of the taping should be less than 50 mm.

7. Insert the cable protector (supplied) in to the slot at the bottom of the antenna base.
8. Pass the antenna cable through the pipe, antenna base in order.
   When laying the cable along side the pipe, put the cable aside to pass through the projection in the antenna base. See [A] in the figure shown below.

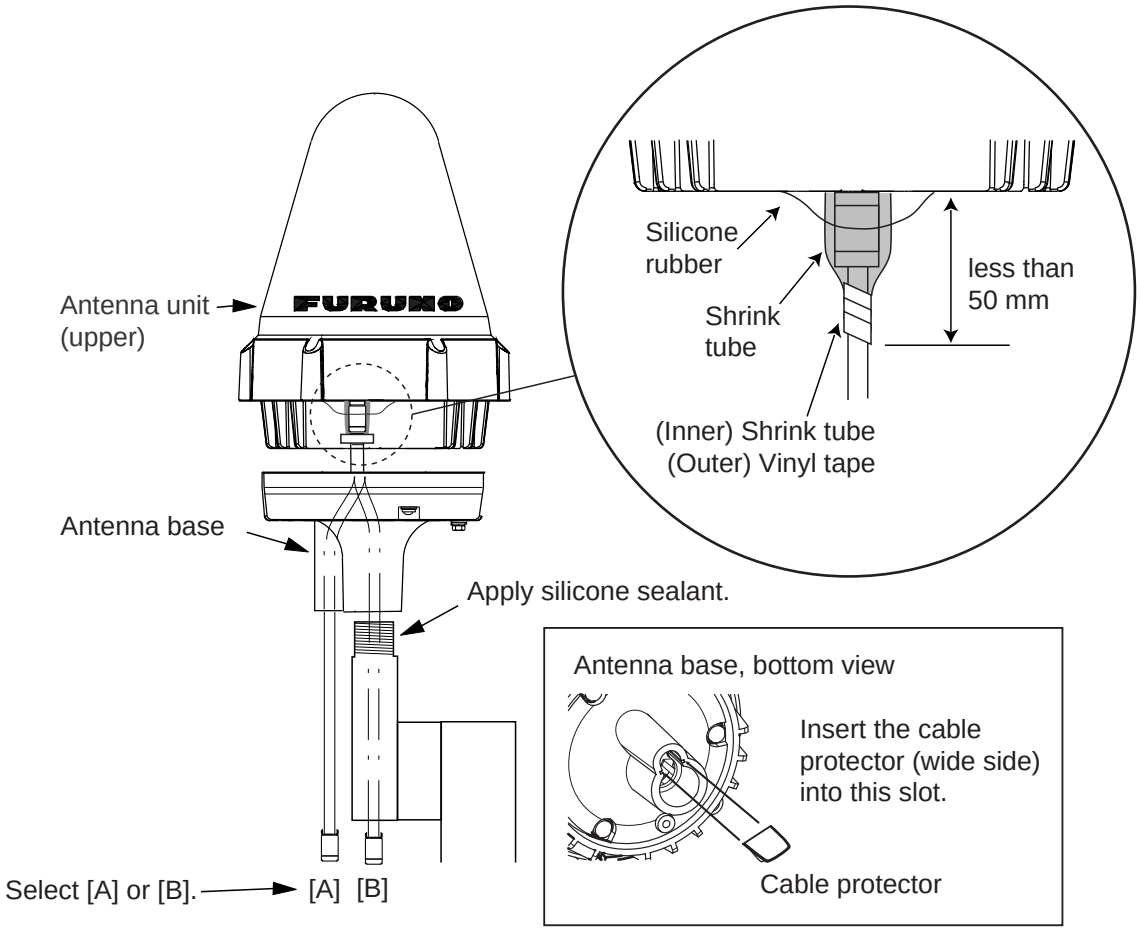

Waterproofing

9. Remount the antenna unit (upper) on the antenna base. (Torque: 2.6 N·m ± 10%)
10. Screw the antenna unit onto the antenna pipe by rotating the antenna unit.
11. Wind self-bonding tape (supplied) at the connection of antenna base and pipe, and then wrap vinyl tape over self-bonding tape.

12. Fix the ground wire RW-4747 (supplied) between the ground terminal on the antenna unit and the ground stud on the mast.
13. Connect the antenna cable (50 or 100 m) and cable assy (attached at step 4).
14. Wrap the connector with self-bonding tape and then vinyl tape. Bind the cable end with a cable tie (local supply).
15. Fix the cable to the mast with cable tie (local supply).

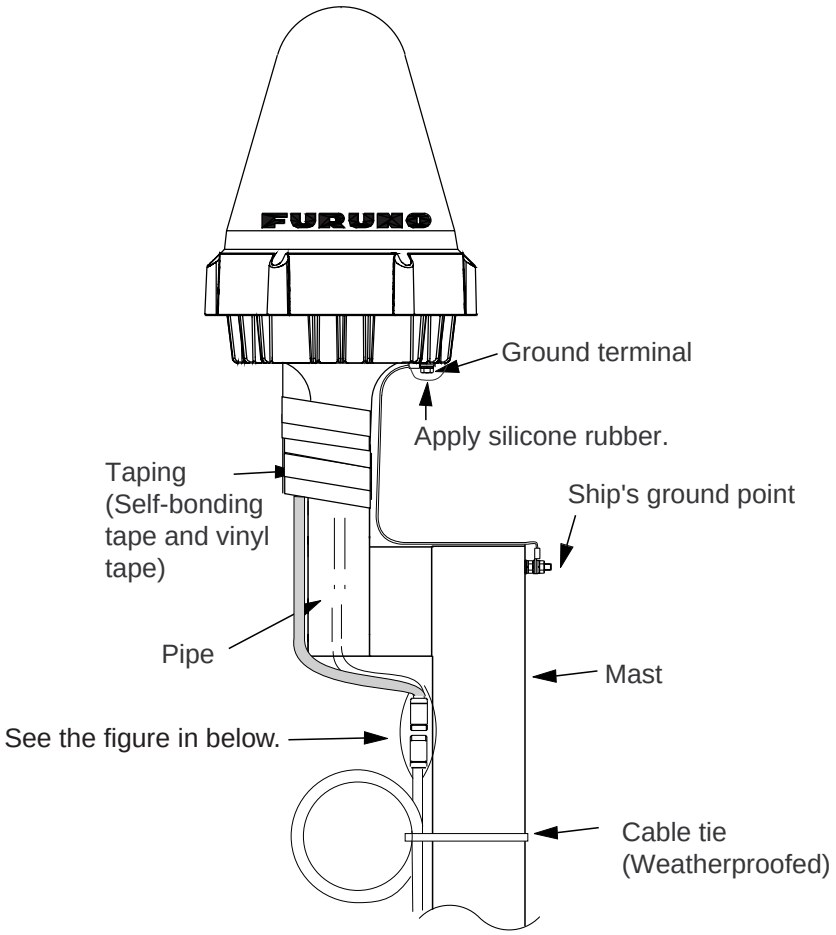

Mounting

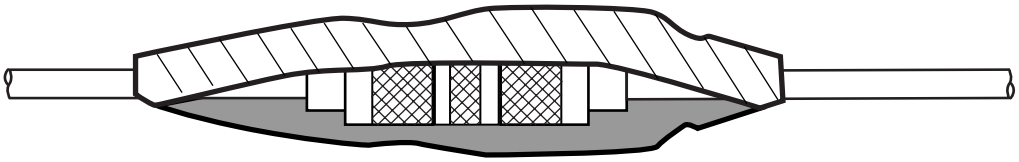

Waterproofing

1.2 Communication Unit

Mounting

Select the following place to mount the communication unit.

- Provide sufficient ventilation.
- For maintenance and checking purpose, leave sufficient space at the sides and rear of the unit.

Use two tapping screws (4x40, supplied) to fix the communication unit. You can insert screws from the top and bottom side of the communication unit for bulkhead mounting. After the screwing, attach the cosmetic caps (2 pcs, supplied) to fixing holes to cover the screw head.

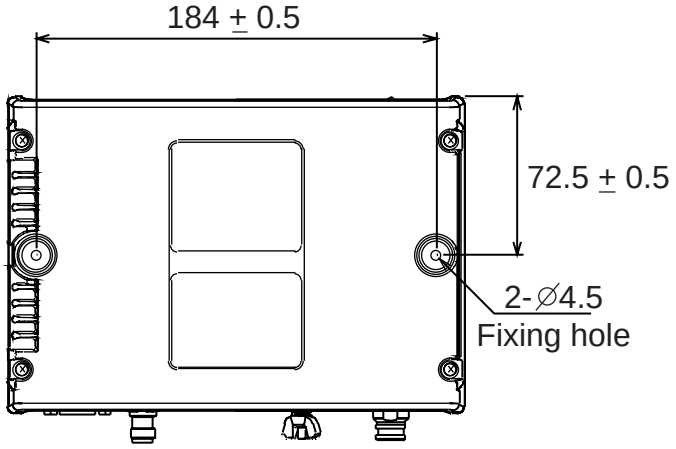

Communication unit, dimensions

1.3 AC/DC Power Supply Unit PR-240 (option)

Fix the unit on a table with four tapping screws (4x16).

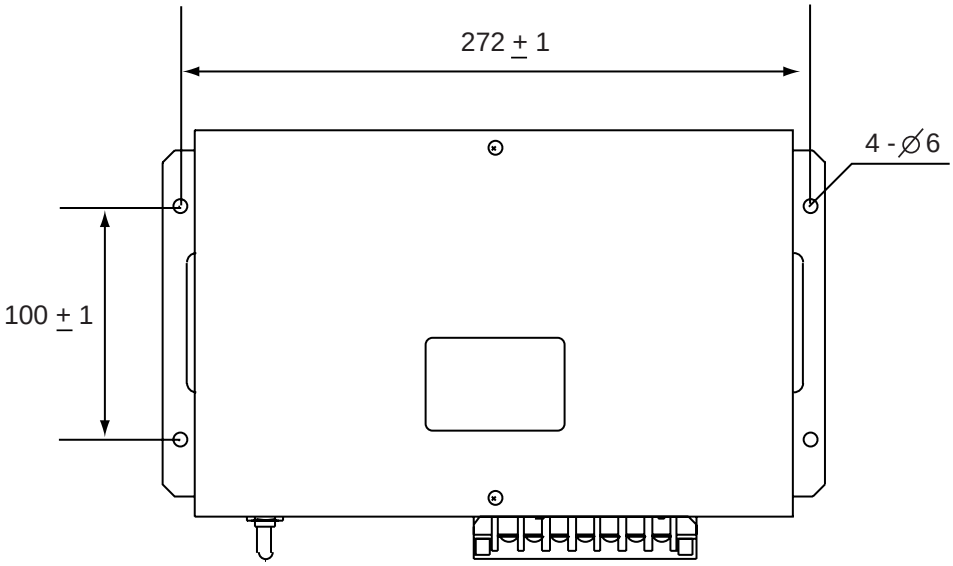

AC/DC power supply unit, dimensions

2. WIRING

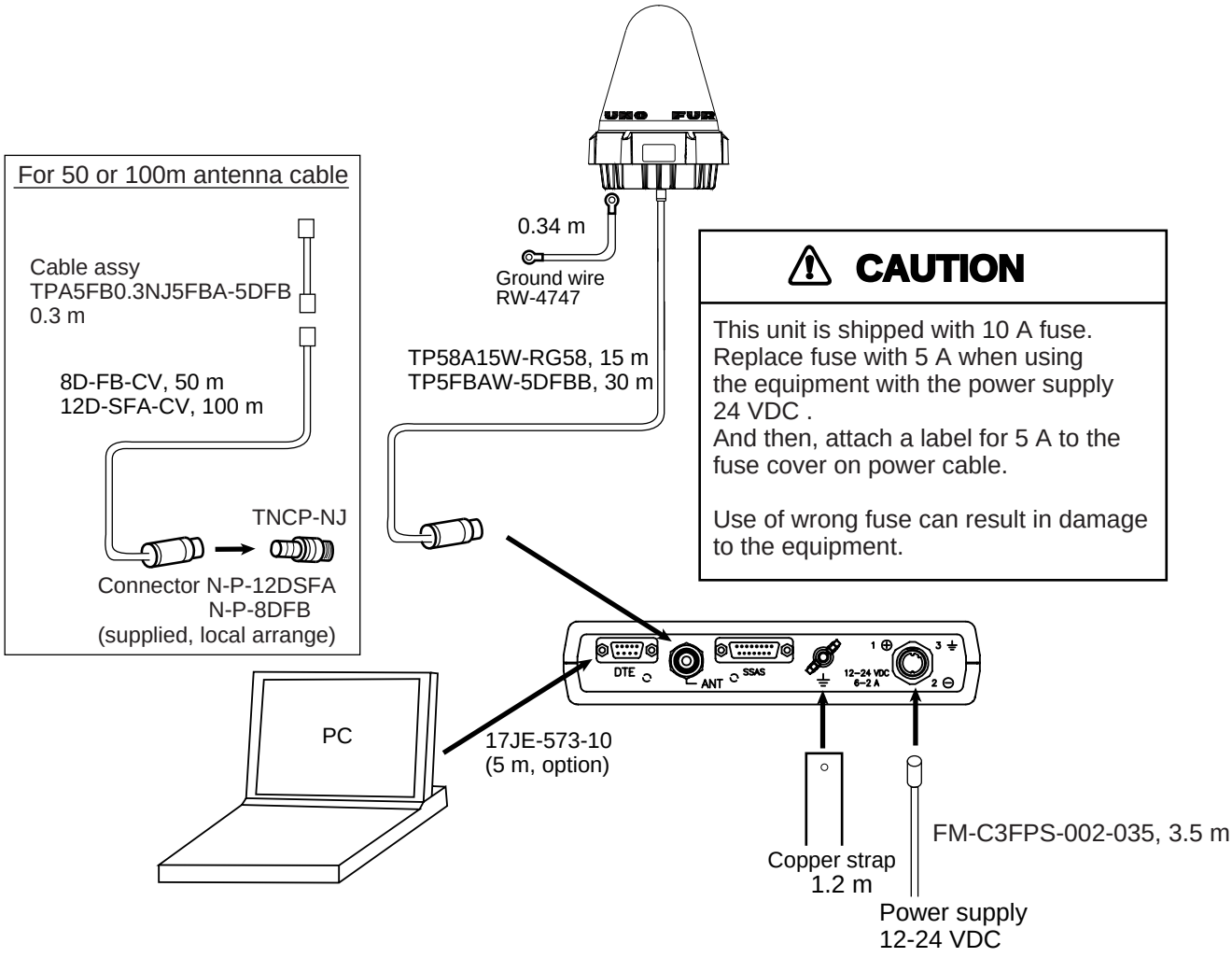

Wiring of FELCOM 16

2.1 Antenna Cable Connector at the Terminal Unit

8D-FB-CV (50 m)

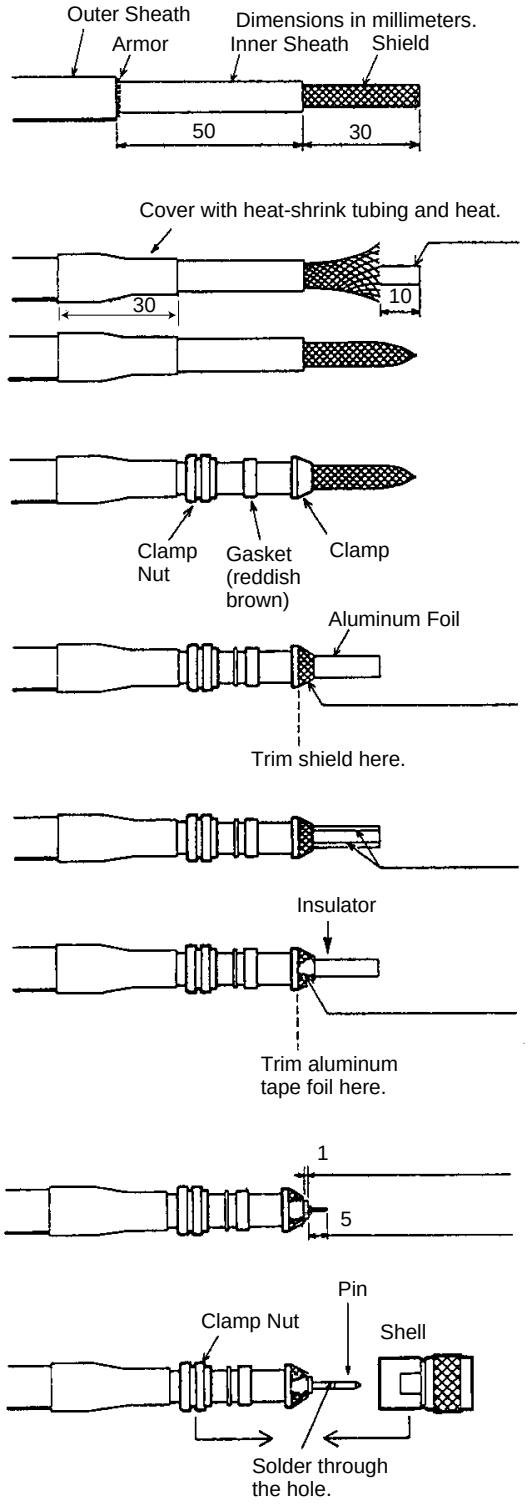

Remove outer sheath and armor by the dimensions shown left.
Expose inner sheath and shield by the dimensions shown left.

Remove insulator and core by 10 mm.

Twist shield end.

Slip on clamp nut, gasket and clamp as shown left.

Fold back shield over clamp and trim.

Cut aluminum foil at four places, 90° from one another.

Fold back aluminum tape foil onto shield and trim.

Expose the insulator by 1 mm.

Expose the insulator by 5 mm.

Slip the pin onto the conductor. Solder them together through the hole on the pin.

Insert the pin into the shell. Screw the clamp nut into the shell.
(Tighten by turning the clamp nut. Do not tighten by turning the shell.)

How to fabricate antenna cable 8D-FB-CV (50 m)

12D-SFA-CV (100)

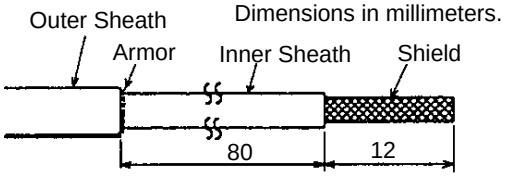

Remove outer sheath and armor by the dimensions shown left.
Expose inner sheath and shield by the dimensions shown left.

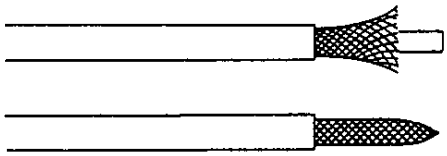

Twist shield end.

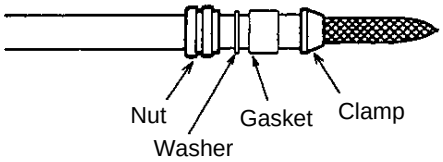

Slip on clamp nut, gasket and clamp as shown left.

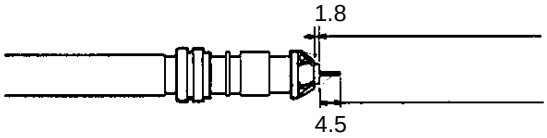

Expose the insulator by 1.8 mm.

Expose the core by 4.5 mm.

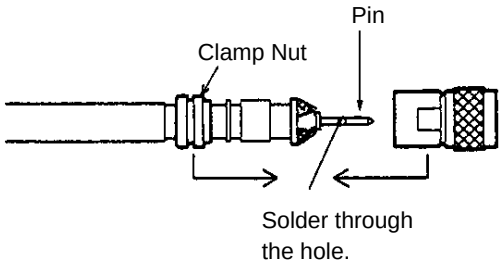

Slip the pin onto the conductor. Solder them together through the hole on the pin.

Insert the pin into the shell. Screw the clamp nut into the shell.
(Tighten by turning the clamp nut. Do not tighten by turning the shell.)

How to fabricate antenna cable 12D-SFA-CV

3. SETTINGS AFTER THE INSTALLATION

3.1 Installing software

After installing the equipment, install the FELCOM 16 software (F16PC) in the PC as follows:

1. Turn on the PC.
2. Set FD-ROM in floppy disk drive.
3. Click the icon of “SETUP.EXE” in the floppy disk. The setup procedure begins, showing the welcome dialog box.

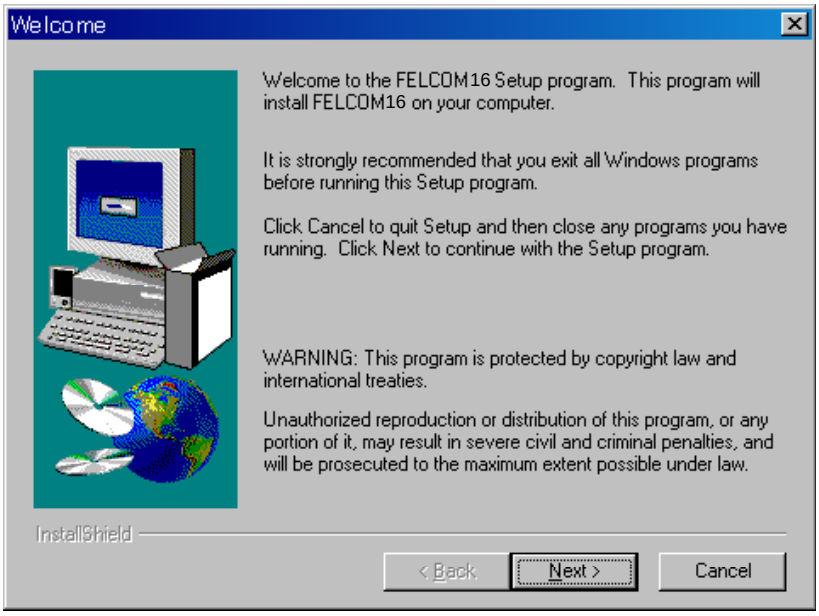

Welcome dialog box

4. Click the [Next] button.

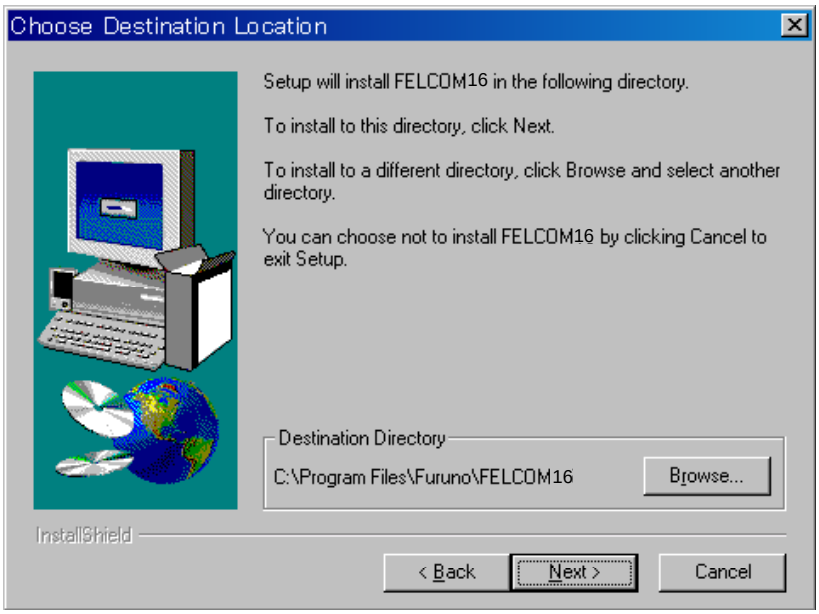

Choose destination location dialog box

5. Click the [Next] button.

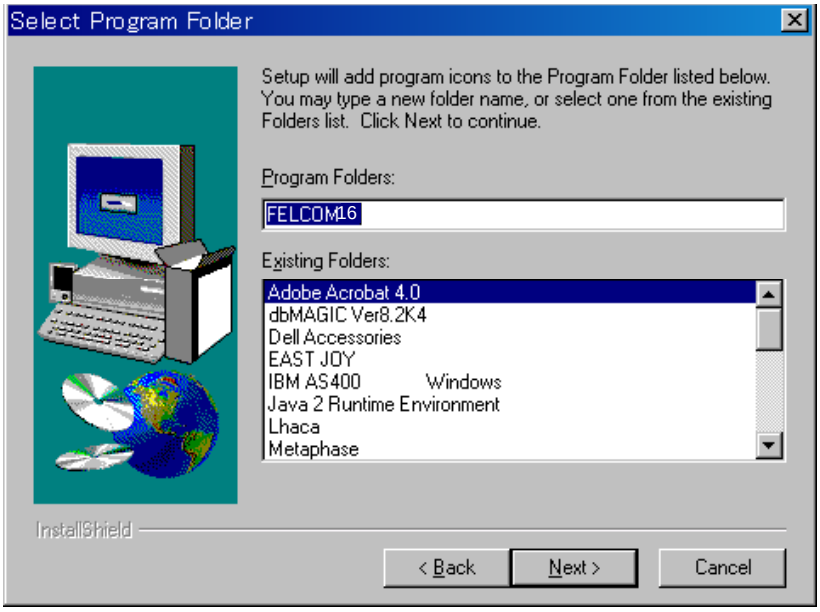

Select program folder dialog box

6. Click the [Next] button.

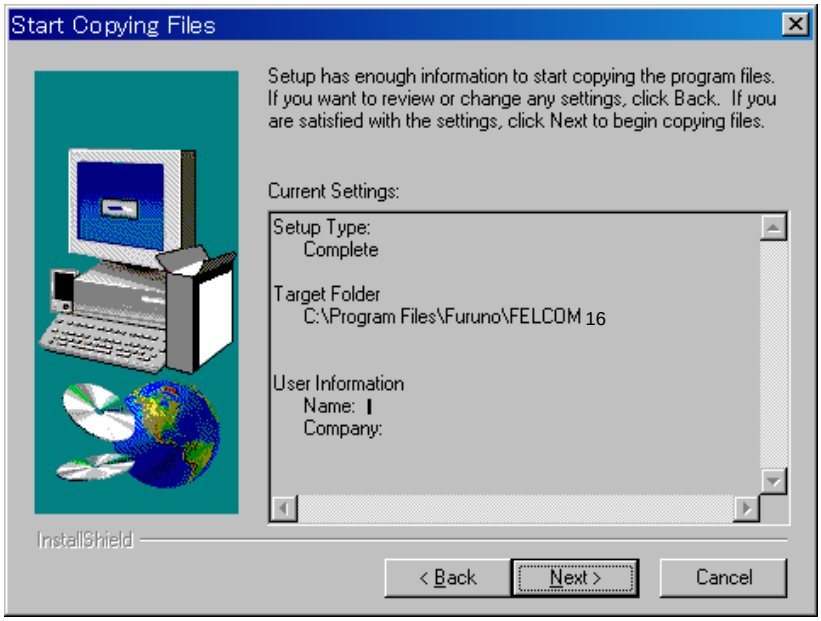

Start copying files dialog box

7. Click the [Next] button and the installation begins. When the installation is completed, the FELCOM 16 dialog box appears.

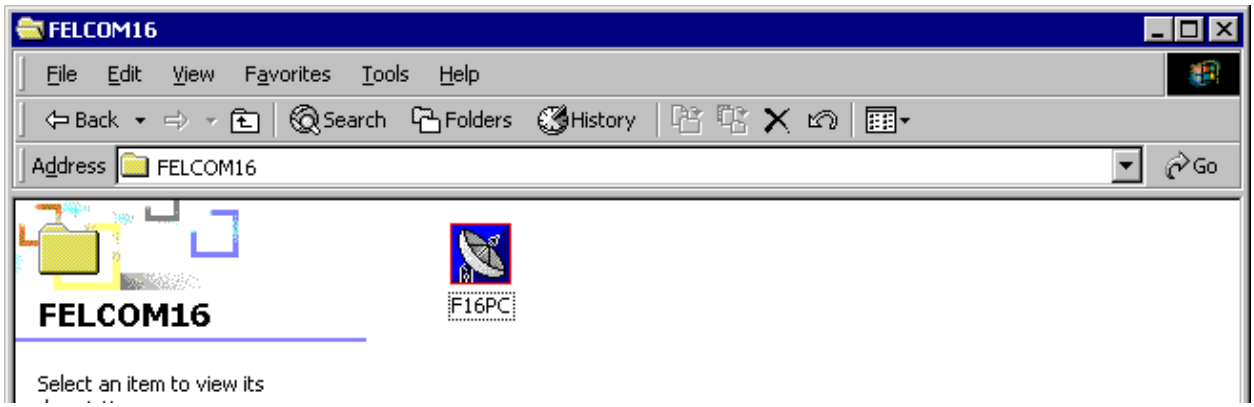

FELCOM 16 dialog box

8. Click the Close button (☒)at the top right corner of the dialog box. The “Setup Complete” dialog box appears.

Setup complete dialog box

Note: If you want to launch the program file now check the box next to “Yes, Launch the program file.” The application will launch after the completion of step 9.

9. Click the [Finish] button. The FELCOM 16 PC application shortcut is created on the desktop.

F16PC

Note: To uninstall the F16 application see the operator’s manual for the PC.

3.2 Setting the IMN (Inmarsat Mobile No.)

Set your IMN (Inmarsat Mobile No.) using the and PC as below.

1. Power on the communication unit and PC in order.
2. Double click [F16PC] on the screen to start the program.
3. Press the [F8] function key to show the Setup menu.

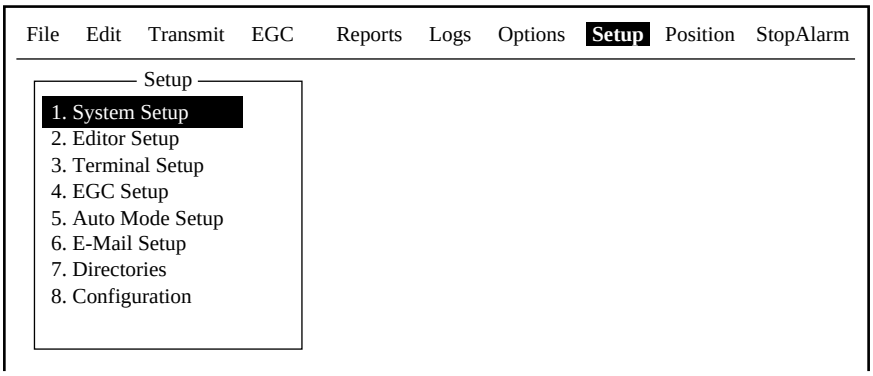

Setup menu

4. Press [1] key to display the System Setup menu.

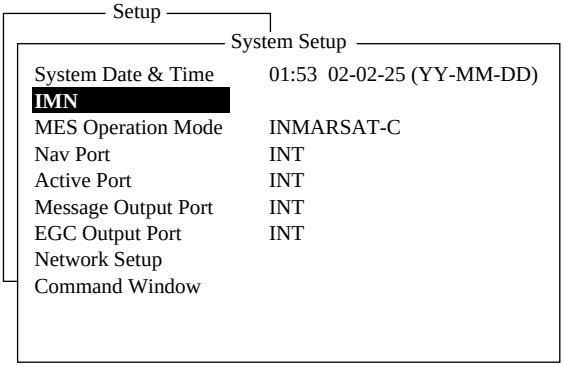

System Setup menu

5. Confirm that the IMN is selected, and then press the [Enter] key.
   The entering field appears.
6. Key in your IMN.
7. Press the [Enter] key.
8. Press the [Esc] key to escape from the entering field.
9. Press the [Enter] key.

To clear the IMN, press [I] [M] [N] in order while pressing the [Alt] key down at step 6.
When using the FELCOM 16 for VMS (Vessel Monitoring System), DNID (Data Network ID) has to be downloaded via the LES (Land Earth Station). This arrangement is normally done by authority of VMS.

4. CHANGING POWER SUPPLY SPECIFICATIONS

The AC/DC power supply unit PR-240 is shipped ready for connection to a 200-230 VAC ship's mains. If the ship's mains is 100 VAC-115 VAC, change the tap connection and terminal board connection as below. Attach a label supplied as accessories to the front panel according to the ship's mains.

Ship's mains	Tap connection	Terminal board	Label
200-230 VAC	SEL 230 V	Below (a)	200-230 VAC 2.2-1.7 A 1ϕ 50/60 Hz
100-115 VAC	SEL 115 V	Below (b)	100-115 VAC 3.2-2.6 A 1ϕ 50/60 Hz

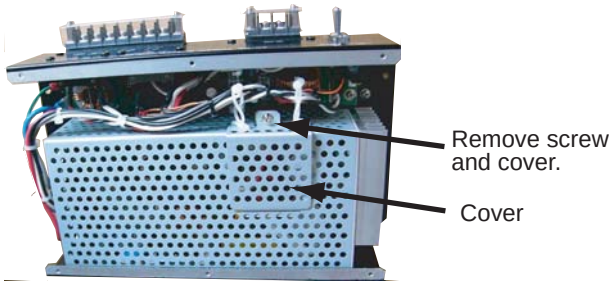

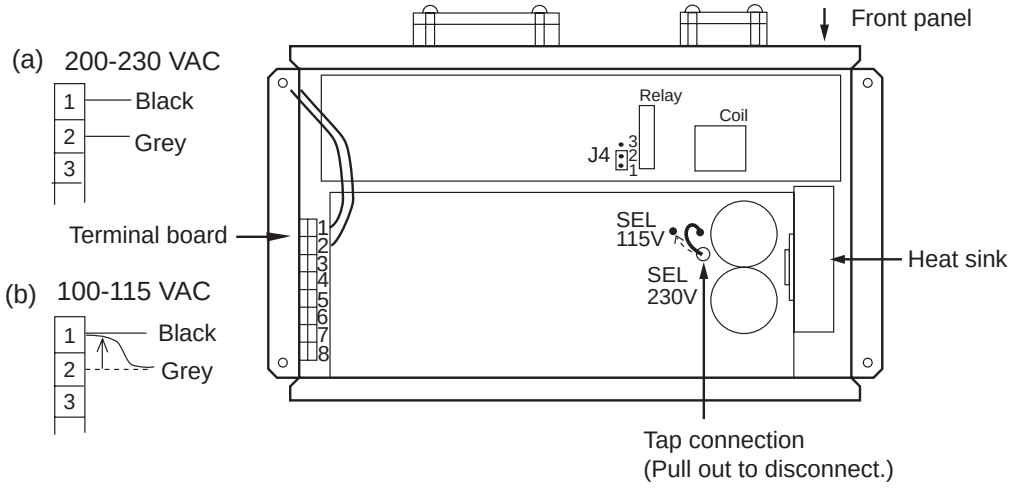

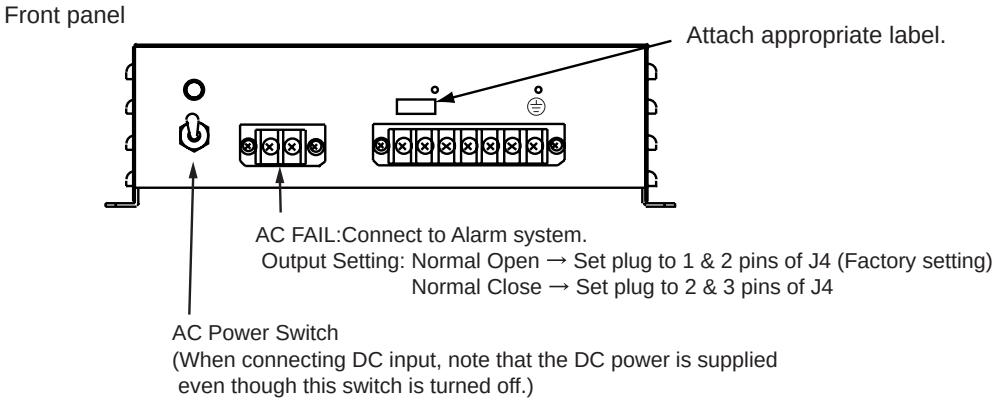

Note: The DC output load must be less than 8A.

PACKING LIST FELCOM16-*

NAME	OUTLINE	DESCRIPTION/CODE №	Q'TY
ユニット UNIT			
ｱﾝﾃﾅﾕﾆｯﾄ一式 ANTENNA UNIT	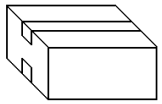	IC-116-** 000-043-553-00 **	1
通信制御ﾕﾆｯﾄ COMMUNICATION UNIT	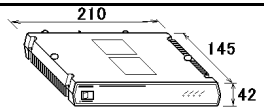	IC-216-* 000-043-542-00 **	1
通信制御用予備品 COMMUNICATION UNIT SPARE PARTS			
予備品 SPARE PARTS		SP16-01401 004-439-530-00	1
通信制御用工材 COMMUNICATION UNIT INSTALLATION MATERIALS			
工事材料 INSTALLATION MATERIALS		CP16-02401 004-439-540-00	1
通信制御用付属品 COMMUNICATION UNIT ACCESSORIES			
付属品 ACCESSORIES		FP16-00700 004-439-550-00	1
図書 DOCUMENT			
装備要領書 INSTALLATION MANUAL	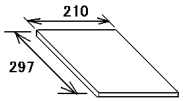	IM*-56380-* 000-809-346-1* **	1
取扱説明書 OPERATOR'S MANUAL	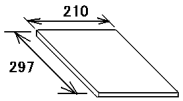	OM*-56380-* 000-809-344-1* **	1

ｺｰﾄﾞ番号末尾の[**]は、選択品の代表ｺｰﾄﾞを表します。
CODE NUMBER ENDING WITH "**" INDICATES THE CODE NUMBER OF REPRESENTATIVE MATERIAL.

NAME	OUTLINE	DESCRIPTION/CODE №	Q'TY
取扱説明書 OPERATOR'S MANUAL	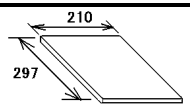	OM*-56351-* 000-150-358-1* **	1
ｱﾌﾟﾘｹｰｼｮﾝﾌｫｰﾑ REGISTRATION FOR SERVICE ACTIVATION	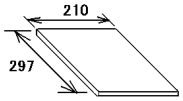	J5-950010-* 000-807-330-1*	1
ﾋｭｰｽﾞ変更のお願い NOTICE FOR FUSE REPLACEMENT	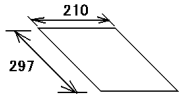	C52-00206-* 000-147-004-1*	1

(略図の寸法は、参考値です。 DIMENSIONS IN DRAWING FOR REFERENCE ONLY.)

型式/ｺｰﾄﾞ番号が2段の場合、下段より上段に代わる過渡期品であり、どちらかが入っています。 なお、品質は変わりません。

TWO TYPES AND CODES MAY BE LISTED FOR AN ITEM. THE LOWER PRODUCT MAY BE SHIPPED IN PLACE OF THE UPPER PRODUCT. QUALITY IS THE SAME.

PACKING LIST FELCOM16-*-SSAS

NAME	OUTLINE	DESCRIPTION/CODE No.	Q'TY
ユニット UNIT			
保安警報発呼器一式 SSAS ALERT UNIT	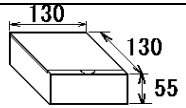	IC-307 000-043-558-00	2
接続箱一式 JUNCTION BOX	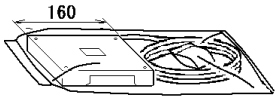	IC-315 000-043-557-00	1
ｱﾝﾃﾅﾕﾆｯﾄ一式 ANTENNA UNIT	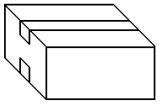	IC-116-** 000-043-553-00 **	1
通信制御ﾕﾆｯﾄ COMMUNICATION UNIT	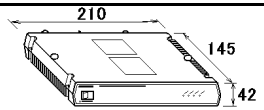	IC-216-* 000-043-542-00 **	1
通信制御用予備品 COMMUNICATION UNIT SPARE PARTS			
予備品 SPARE PARTS		SP16-01401 004-439-530-00	1
通信制御用工材 COMMUNICATION UNIT INSTALLATION MATERIALS			
工事材料 INSTALLATION MATERIALS		CP16-02401 004-439-540-00	1
通信制御用付属品 COMMUNICATION UNIT ACCESSORIES			
付属品 ACCESSORIES		FP16-00700 004-439-550-00	1

ｺｰﾄﾞ番号末尾の[**]は、選択品の代表ｺｰﾄﾞを表します。
CODE NUMBER ENDING WITH "**" INDICATES THE CODE NUMBER OF REPRESENTATIVE MATERIAL.

NAME	OUTLINE	DESCRIPTION/CODE No.	Q'TY
図書 DOCUMENT			
装備要領書 INSTALLATION MANUAL	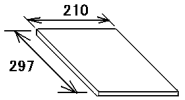	IM*-56380-* 000-809-346-1* **	1
取扱説明書 OPERATOR'S MANUAL	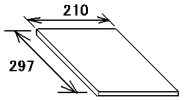	OM*-56380-* 000-809-344-1* **	1
取扱説明書 OPERATOR'S MANUAL	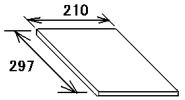	OM*-56351-* 000-150-358-1* **	1
ｱﾌﾟﾘｹｰｼｮﾝﾌｫｰﾑ REGISTRATION FOR SERVICE ACTIVATION	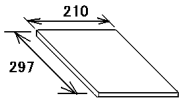	J5-950010-* 000-807-330-1*	1
ﾋｭｰｽﾞ変更のお願い NOTICE FOR FUSE REPLACEMENT	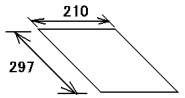	C52-00206-* 000-147-004-1*	1

型式/ｺｰﾄﾞ番号が2段の場合、下段より上段に代わる過渡期品であり、どちらかが入っています。 なお、品質は変わりません。

TWO TYPES AND CODES MAY BE LISTED FOR AN ITEM. THE LOWER PRODUCT MAY BE SHIPPED IN PLACE OF THE UPPER PRODUCT. QUALITY IS THE SAME.

(略図の寸法は、参考値です。DIMENSIONS IN DRAWING FOR REFERENCE ONLY.)

PACKING LIST

16AK-X-9863 -2 1/1

IC-115-E-0/IC-116-E-0/IC-115-V

A-3

NAME	OUTLINE	DESCRIPTION/CODE No.	Q'TY
ユニット UNIT			
ｱﾝﾃﾅﾕﾆｯﾄ ANTENNA UNIT	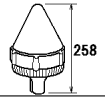	IC-115/IC-116 000-043-408-00 **	1

ｺｰﾄﾞ番号末尾の[**]は、選択品の代表ｺｰﾄﾞを表します。
CODE NUMBER ENDING WITH "**" INDICATES THE CODE NUMBER OF REPRESENTATIVE MATERIAL.

型式/ｺｰﾄﾞ番号が2段の場合、下段より上段に代わる過渡期品であり、どちらかが入っています。 なお、品質は変わりません。

TWO TYPES AND CODES MAY BE LISTED FOR AN ITEM. THE LOWER PRODUCT MAY BE SHIPPED IN PLACE OF THE UPPER PRODUCT. QUALITY IS THE SAME.

（略図の寸法は、参考値です。 DIMENSIONS IN DRAWING FOR REFERENCE ONLY.）

16AK-X-9863

PACKING LIST

16AK-X-9853 -6 1/1

IC-307

A-4

NAME	OUTLINE	DESCRIPTION/CODE No.	Q'TY
ユニット UNIT			
保安警報発呼器 SSAS ALERT UNIT	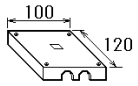	IC-307 000-043-474-00	1
付属品 ACCESSORIES			
DｶﾊﾞｰL組品 DISTRESS COVER	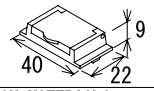	05-073-1111-0 ROHS 100-274-720-10	1
工事材料 INSTALLATION MATERIALS			
+ﾄﾗｽﾀｯﾋﾟﾝﾈｼﾞ 1ｼｭ SELF-TAPPING SCREW	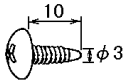	3X10 SUS304 000-162-604-10	4
圧着端子 CRIMP-ON LUG	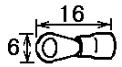	FV1.25-3(LF) 000-166-756-10	8
圧着端子 CRIMP-ON LUG	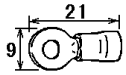	FV2-3 000-157-246-10	2
図書 DOCUMENT			
IC-305/307引き渡し前の注意 BEFORE DELIVERING TO OWNER	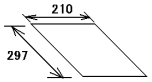	C52-00202-* 000-809-354-1*	1
ｶﾊﾞｰ貼付要領書 ATTACHMENT OF SWITCH COVER	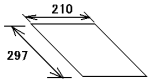	C52-00403-* 000-150-849-1*	1

型式/ｺｰﾄﾞ番号が2段の場合、下段より上段に代わる過渡期品であり、どちらかが入っています。 なお、品質は変わりません。

TWO TYPES AND CODES MAY BE LISTED FOR AN ITEM. THE LOWER PRODUCT MAY BE SHIPPED IN PLACE OF THE UPPER PRODUCT. QUALITY IS THE SAME.

（略図の寸法は、参考値です。 DIMENSIONS IN DRAWING FOR REFERENCE ONLY.）

16AK-X-9853

PACKING LIST

16AK-X-9854 -3 1/1

IC-315

A-5

NAME	OUTLINE	DESCRIPTION/CODE No.	Q'TY
ユニット UNIT			
接続箱 JUNCTION BOX	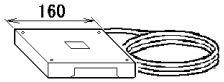	IC-315 000-043-431-00	1
工事材料 INSTALLATION MATERIALS		**CP16-02501**	
工事材料 INSTALLATION MATERIALS		CP16-02501 004-438-930-00	1

型式/ｺｰﾄﾞ番号が2段の場合、下段より上段に代わる過渡期品であり、どちらかが入っています。 なお、品質は変わりません。

TWO TYPES AND CODES MAY BE LISTED FOR AN ITEM. THE LOWER PRODUCT MAY BE SHIPPED IN PLACE OF THE UPPER PRODUCT. QUALITY IS THE SAME.

（略図の寸法は、参考値です。 DIMENSIONS IN DRAWING FOR REFERENCE ONLY.）

16AK-X-9854

A-6

FURUNO

CODE NO.		16AK-X-9405 -2
TYPE		1/1

工事材料表

INSTALLATION MATERIALS

IC-116

番号 NO.	名称 NAME	略図 OUTLINE	型名／規格 DESCRIPTIONS		数量 Q'TY	用途／備考 REMARKS
1	ｹｰﾌﾞﾙ組品 CABLE ASSY.		12D-SFA-CV *100M*		1	選択 TO BE SELECTED
			CODE NO.	000-138-866		
2	ｹｰﾌﾞﾙ組品 CABLE ASSY.		8D-FB-CV *50M*		1	選択 TO BE SELECTED
			CODE NO.	000-117-599		
3	ｹｰﾌﾞﾙ組品 CABLE ASSY.	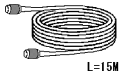	TP58A15W-RG58 *15M*		1	選択 TO BE SELECTED
			CODE NO.	000-146-252		
4	ｹｰﾌﾞﾙ組品 CABLE ASSY.	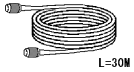	TP5FBAW-5DFBB *30M*		1	選択 TO BE SELECTED
			CODE NO.	000-146-250		

16AK-X-9405

FURUNO ELECTRIC CO., LTD.

（略図の寸法は、参考値です。 DIMENSIONS IN DRAWING FOR REFERENCE ONLY.）

FURUNO

CODE NO.	004-439-060-00	16AK-X-9401 -6
TYPE	CP16-02101	1/1

工事材料表

INSTALLATION MATERIALS

番号 NO.	名称 NAME	略図 OUTLINE	型名／規格 DESCRIPTIONS	数量 Q'TY	用途／備考 REMARKS
1	ｲﾗｯｸｽｽﾘｰﾌﾞ SCM2 SHRINK TUBING	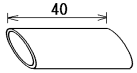	07-1220 ｸﾛ *40MM* CODE NO. 000-165-300-10	1	
2	ｹｰﾌﾞﾙ保護材 CABLE PROTECTOR	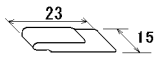	16-018-1251-1 ROHS 16-018-1251-1 CODE NO. 100-298-111-10 100-298-111-00	1	
3	ﾌﾞﾁﾙｺﾞﾑﾃｰﾌﾟ SELF-BONDING TAPE	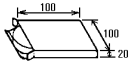	NO.15 CODE NO. 000-835-526-00	1	
4	ｱｰｽ線 GROUND WIRE	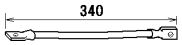	RW-4747-1 CODE NO. 000-566-000-01	1	
5	ｹﾐｼｰﾙ SILICON RUBBER	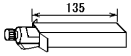	S-8400W ｱﾙﾐﾁｭｰﾌﾞ 50G CODE NO. 000-158-483-00	1	

型式/ｺｰﾄﾞ番号が２段の場合、下段より上段に代わる過渡期品であり、どちらかが入っています。　なお、品質は変わりません。

TWO TYPES AND CODES MAY BE LISTED FOR AN ITEM. THE LOWER PRODUCT MAY BE SHIPPED IN PLACE OF THE UPPER PRODUCT. QUALITY IS THE SAME.

（略図の寸法は、参考値です。　DIMENSIONS IN DRAWING FOR REFERENCE ONLY.）

FURUNO

CODE NO.	004-439-070-00	16AK-X-9402 -7
TYPE	CP16-02111	1/1

工事材料表

INSTALLATION MATERIALS

番号 NO.	名称 NAME	略図 OUTLINE	型名／規格 DESCRIPTIONS	数量 Q'TY	用途／備考 REMARKS
1	ｲﾗｯｸｽｽﾘｰﾌﾞ SCM2 SHRINK TUBING	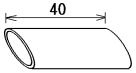	07-1220 ｸﾛ *40MM* CODE NO. 000-165-300-10	1	
2	ｹｰﾌﾞﾙ保護材 CABLE PROTECTOR	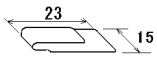	16-018-1251-1 ROHS 16-018-1251-1 CODE NO. 100-298-111-10 100-298-111-00	1	
3	ﾌﾞﾁﾙｺﾞﾑﾃｰﾌﾟ SELF-BONDING TAPE	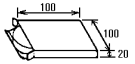	NO.15 CODE NO. 000-835-526-00	1	
4	ｺﾈｸﾀ(N) CONNECTOR	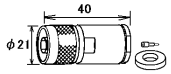	N-P-8DFB-CF CODE NO. 000-156-918-10	1	
5	ｱｰｽ線 GROUND WIRE	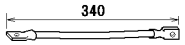	RW-4747-1 CODE NO. 000-566-000-01	1	
6	ｹﾐｼｰﾙ SILICON RUBBER	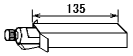	S-8400W ｱﾙﾐﾁｭｰﾌﾞ 50G CODE NO. 000-158-483-00	1	
7	ｺﾈｸﾀ(TNC-N) CONNECTOR	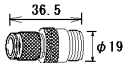	TNCP-NJ CODE NO. 000-156-599-10	1	
8	ｹｰﾌﾞﾙ組品 CABLE ASSY.		TPA5FB0.3NJ5FBA-5DFB CODE NO. 000-159-524-10	1	

型式/ｺｰﾄﾞ番号が２段の場合、下段より上段に代わる過渡期品であり、どちらかが入っています。　なお、品質は変わりません。

TWO TYPES AND CODES MAY BE LISTED FOR AN ITEM. THE LOWER PRODUCT MAY BE SHIPPED IN PLACE OF THE UPPER PRODUCT. QUALITY IS THE SAME.

（略図の寸法は、参考値です。　DIMENSIONS IN DRAWING FOR REFERENCE ONLY.）

FURUNO

CODE NO.	004-439-080-00	16AK-X-9403 -7
TYPE	CP16-02121	1/1

工事材料表

INSTALLATION MATERIALS

番号 NO.	名称 NAME	略図 OUTLINE	型名／規格 DESCRIPTIONS	数量 Q'TY	用途／備考 REMARKS
1	ｲﾗｯｸｽｽﾘｰﾌﾞ SCM2 SHRINK TUBING	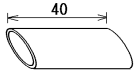	07-1220 ｸﾛ *40MM* CODE NO. 000-165-300-10	1	
2	ｹｰﾌﾞﾙ保護材 CABLE PROTECTOR	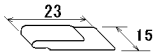	16-018-1251-1 ROHS 16-018-1251-1 CODE NO. 100-298-111-10 100-298-111-00	1	
3	ﾌﾞﾁﾙｺﾞﾑﾃｰﾌﾟ SELF-BONDING TAPE	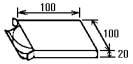	NO.15 CODE NO. 000-835-526-00	1	
4	ｺﾈｸﾀ(N) CONNECTOR	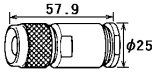	N-SP-12DSFA CODE NO. 000-136-422-00	1	
5	ｱｰｽ線 GROUND WIRE	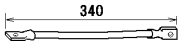	RW-4747-1 CODE NO. 000-566-000-01	1	
6	ｹﾐｼｰﾙ SILICON RUBBER	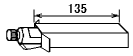	S-8400W ｱﾙﾐﾁｭｰﾌﾞ 50G CODE NO. 000-158-483-00	1	
7	ｺﾈｸﾀ(TNC-N) CONNECTOR	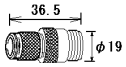	TNCP-NJ CODE NO. 000-156-599-10	1	
8	ｹｰﾌﾞﾙ組品 CABLE ASSY.		TPA5FB0.3NJ5FBA-5DFB CODE NO. 000-159-524-10	1	

型式/ｺｰﾄﾞ番号が２段の場合、下段より上段に代わる過渡期品であり、どちらかが入っています。 なお、品質は変わりません。

TWO TYPES AND CODES MAY BE LISTED FOR AN ITEM. THE LOWER PRODUCT MAY BE SHIPPED IN PLACE OF THE UPPER PRODUCT. QUALITY IS THE SAME.

（略図の寸法は、参考値です。 DIMENSIONS IN DRAWING FOR REFERENCE ONLY.）

PACKING LIST

PR-240/-CE-MSA

NAME	OUTLINE	DESCRIPTION/CODE No.	Q'TY
ユニット UNIT			
AC-DC電源 POWER SUPPLY UNIT	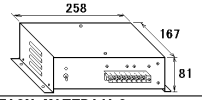	PR-240 000-013-636-00 **	1
工事材料 INSTALLATION MATERIALS			
工事材料 INSTALLATION MATERIALS		CP24-00151 005-931-190-00	1

ｺｰﾄﾞ番号末尾の[**]は、選択品の代表ｺｰﾄﾞを表します。
CODE NUMBER ENDING WITH "**" INDICATES THE CODE NUMBER OF REPRESENTATIVE MATERIAL.

型式/ｺｰﾄﾞ番号が2段の場合、下段より上段に代わる過渡期品であり、どちらかが入っています。 なお、品質は変わりません。

TWO TYPES AND CODES MAY BE LISTED FOR AN ITEM. THE LOWER PRODUCT MAY BE SHIPPED IN PLACE OF THE UPPER PRODUCT. QUALITY IS THE SAME.

（略図の寸法は、参考値です。 DIMENSIONS IN DRAWING FOR REFERENCE ONLY.）

FURUNO

CODE NO.	004-448-860-00	16AL-X-9401 -2
TYPE	0P16-69	1/1

改造ｷｯﾄ
MODIFICATION KIT.

番号 NO.	名称 NAME	略図 OUTLINE	型名／規格 DESCRIPTIONS	数量 Q'TY	用途／備考 REMARKS
1	中国ROHSﾏｰｸ CHINA ROHS SEAL	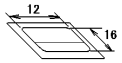	05-898-0362-1 CODE NO. 100-339-211-10	1	
2	ﾊﾘﾏｰｸ(ALC) LABEL	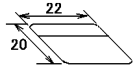	16-013-1052-0 ROHS 16-013-1052-0 CODE NO. 100-281-730-10 100-281-730-00	4	
3	型式銘板(ALC) NAME PLATE	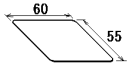	16-018-2002-1 ROHS 16-018-2002-1 CODE NO. 100-320-021-10 100-320-021-00	1	
4	FD-ROM FLOPPY DISK ROM	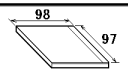	16-5-0179 CODE NO. 004-439-850-00	1	
5	FFAｼｰﾙ SEAL	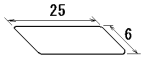	FFA CODE NO. 000-150-470-00	3	

（略図の寸法は、参考値です。 DIMENSIONS IN DRAWING FOR REFERENCE ONLY.）
型式/ｺｰﾄﾞ番号が２段の場合、下段より上段に代わる過渡期品でどちらかが入っています。 なお、品質は変わりません。

TOW TYPES AND CODES MAY BE LISTED. THE BOTTOM PRODCT MAY BE SHIPPED IN PLACE OF THE TOP PRODUCT. QUALITY THE SAME.

FURUNO

CODE NO.	004-439-540-00	16AL-X-9402 -5
TYPE	CP16-02401	1/1

工事材料表
INSTALLATION MATERIALS

IC-216

番号 NO.	名称 NAME	略図 OUTLINE	型名／規格 DESCRIPTIONS	数量 Q'TY	用途／備考 REMARKS
1	ﾋｭｰｽﾞﾊﾘﾏｰｸ FUSE LABEL		03-153-1312-0 ROHS CODE NO. 100-292-140-10	1	
2	ｷｬｯﾌﾟ CAP		040-4025 CODE NO. 000-164-931-10	2	
3	ｱｰｽ板 COPPER STRAP	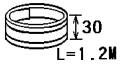	05-003-0031-0 ROHS 05-003-0031-0 CODE NO. 590-300-310-10 590-300-310-00	1	
4	+ﾄﾗｽﾀｯﾋﾟﾝﾈｼﾞ SELF-TAPPING SCREW	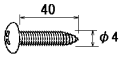	4X40 SUS304 CODE NO. 000-162-606-10	2	
5	ﾋｭｰｽﾞ FUSE GLASS TUBE TYPE	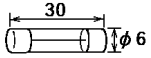	FGBO-A 125V 5A PBF CODE NO. 000-155-853-10	1	
6	ｹｰﾌﾞﾙ組品 CABLE ASSY.	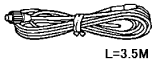	FM-C3FPS-002-035 CODE NO. 000-150-079-00	1	

型式/ｺｰﾄﾞ番号が２段の場合、下段より上段に代わる過渡期品であり、どちらかが入っています。 なお、品質は変わりません。
TWO TYPES AND CODES MAY BE LISTED FOR AN ITEM. THE LOWER PRODUCT MAY BE SHIPPED IN PLACE OF THE UPPER PRODUCT. QUALITY IS THE SAME.
（略図の寸法は、参考値です。 DIMENSIONS IN DRAWING FOR REFERENCE ONLY.）

FURUNO

CODE NO.	004-438-930-00	16AK-X-9407 -3
TYPE	CP16-02501	1/1

工事材料表

INSTALLATION MATERIALS

番号 NO.	名称 NAME	略図 OUTLINE	型名／規格 DESCRIPTIONS		数量 Q'TY	用途／備考 REMARKS
1	ｹｰﾌﾞﾙ押え(1-3) CABLE CLAMP	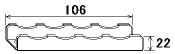	16-018-6008-1 ROHS 16-018-6008-1		1	
			CODE NO.	100-301-101-10 100-301-101-00		
2	+ﾄﾗｽﾀｯﾋﾟﾝﾈｼﾞ 1ｼｭ SELF-TAPPING SCREW	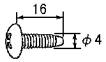	4X16 SUS304		4	
			CODE NO.	000-162-605-10		

型式/ｺｰﾄﾞ番号が２段の場合、下段より上段に代わる過渡期品であり、どちらかが入っています。 なお、品質は変わりません。

TWO TYPES AND CODES MAY BE LISTED FOR AN ITEM. THE LOWER PRODUCT MAY BE SHIPPED IN PLACE OF THE UPPER PRODUCT. QUALITY IS THE SAME.

（略図の寸法は、参考値です。 DIMENSIONS IN DRAWING FOR REFERENCE ONLY.）

FURUNO

CODE NO.	004-439-530-00	16AK-X-9302 -2 1/1
TYPE	SP16-01401	BOX NO. P

SHIP NO.	SPARE PARTS LIST FOR	U S E	SETS PER VESSEL

ITEM NO.	NAME OF PART	OUTLINE	DWG. NO. OR TYPE NO.	QUANTITY WORKING PER SET	QUANTITY WORKING PER VES	QUANTITY SPARE	REMARKS/CODE NO.
1	ﾋｭｰｽﾞ FUSE	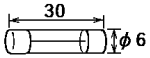	FGBO 125V 10A PBF			1	000-155-826-10
2	管入りﾋｭｰｽﾞ GLASS TUBE FUSE	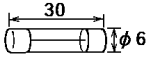	FGBO-A 125V 5A PBF			1	000-155-853-10

MFR'S NAME	FURUNO ELECTRIC CO.,LTD.	DWG NO.	16AK-X-9302	1/1

（略図の寸法は、参考値です。 DIMENSIONS IN DRAWING FOR REFERENCE ONLY.）

型式/ｺｰﾄﾞ番号が２段の場合、下段より上段に代わる過渡期品であり、どちらかが入っています。 なお、品質は変わりません。

TWO TYPES AND CODES MAY BE LISTED FOR AN ITEM. THE LOWER PRODUCT MAY BE SHIPPED IN PLACE OF THE UPPER PRODUCT. QUALITY IS THE SAME.

FURUNO

CODE NO.	004-439-550-00	16AL-X-9501 -1
TYPE	FP16-00700	1/1

付属品表

ACCESSORIES

INMARSAT MINI-C

FELCOM16

番号 NO.	名称 NAME	略図 OUTLINE	型名／規格 DESCRIPTIONS		数量 Q'TY	用途／備考 REMARKS
1	ﾌﾛｯﾋﾟｰﾃﾞｨｽｸ組品 FLOPPY DISK	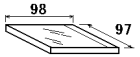	FP16-00601		1	
			CODE NO.	004-439-400-00		
2	FD-ROM組品 FLOPPY DISK ROM	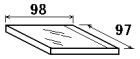	16-5-0166		1	
			CODE NO.	004-439-740-00		

型式/ｺｰﾄﾞ番号が２段の場合、下段より上段に代わる過渡期品であり、どちらかが入っています。　なお、品質は変わりません。

TWO TYPES AND CODES MAY BE LISTED FOR AN ITEM. THE LOWER PRODUCT MAY BE SHIPPED IN PLACE OF THE UPPER PRODUCT. QUALITY IS THE SAME.

（略図の寸法は、参考値です。　DIMENSIONS IN DRAWING FOR REFERENCE ONLY.）

FURUNO

D-1

寸法区分（mm）DIMENSION	公差（mm）TOLERANCE
L≦50	±1.5
50<L≦100	±2.5
100<L≦500	±3

表1 TABLE 1

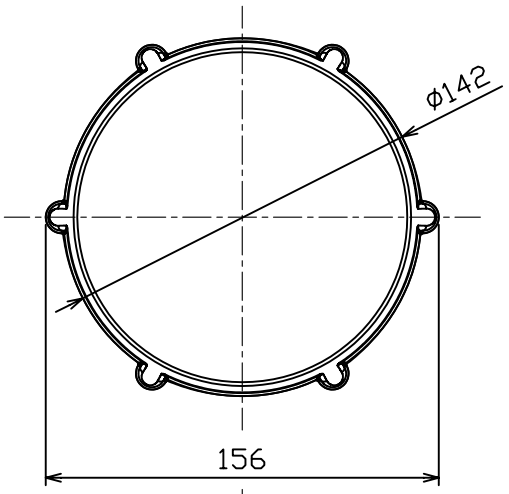

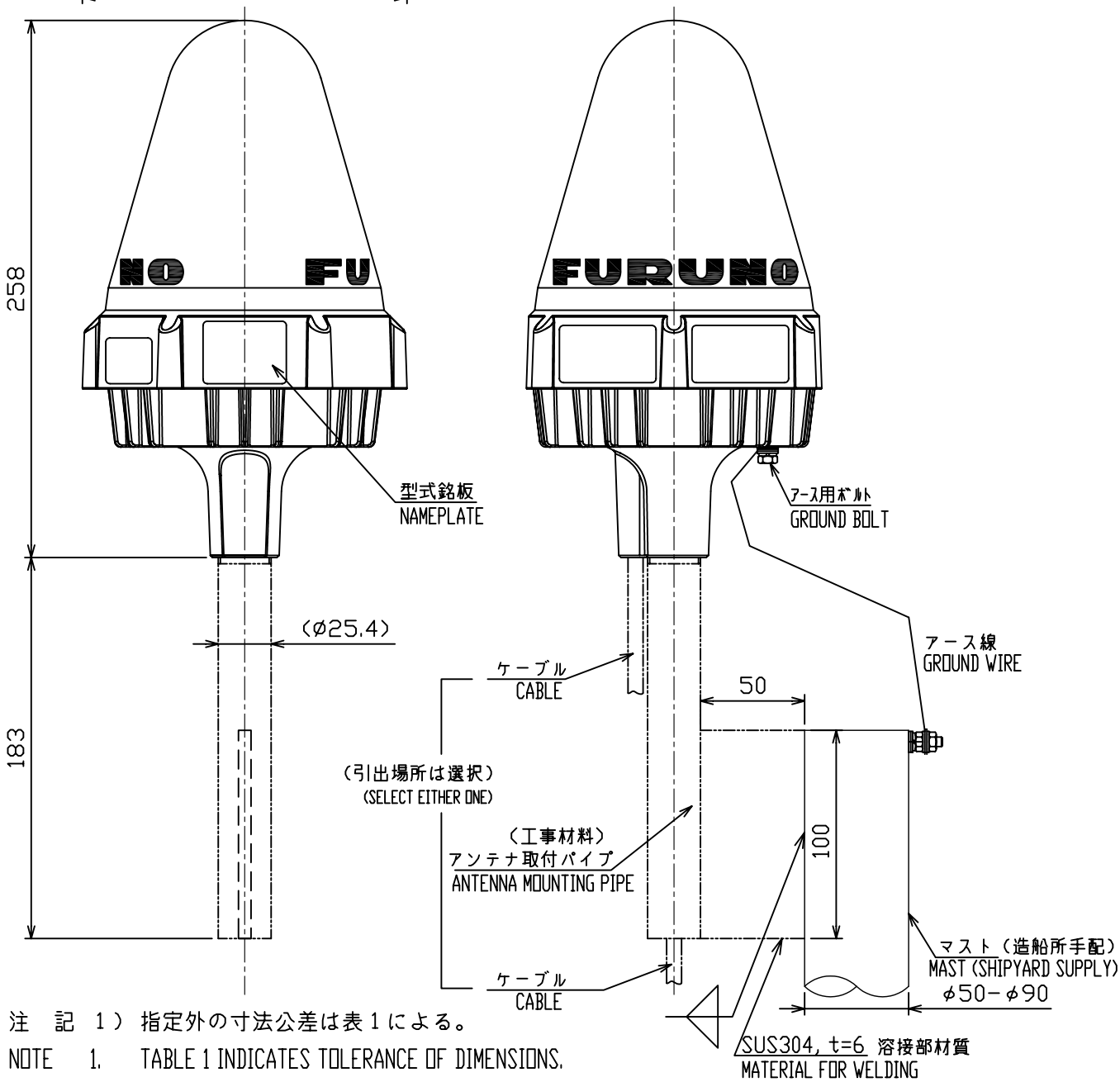

注　記　1）指定外の寸法公差は表1による。

NOTE　1.　TABLE 1 INDICATES TOLERANCE OF DIMENSIONS.

DRAWN Dec. 9 '05 T.YAMASAKI		TITLE	IC-115/116
CHECKED Dec. 12 '05 T.TAKENO		名称	アンテナユニット
APPROVED Dec.19'05 T.Matsuyuchi	FELCOM 15/16		外寸図
SCALE 1/3 MASS 1.4 ±10% kg	質量はパイプ工材を含まず。MASS W/O MOUNTING PIPE.	NAME	ANTENNA UNIT
DWG No. C5635-G01- D	16-018-100G-1		OUTLINE DRAWING

FURUNO ELECTRIC CO., LTD.

FURUNO

表１ TABLE 1

寸法区分（ｍｍ） DIMENSIONS	公差（ｍｍ） TOLERANCE
Ｌ≦５０	±１．５
５０<Ｌ≦１００	±２．５
１００<Ｌ≦５００	±３

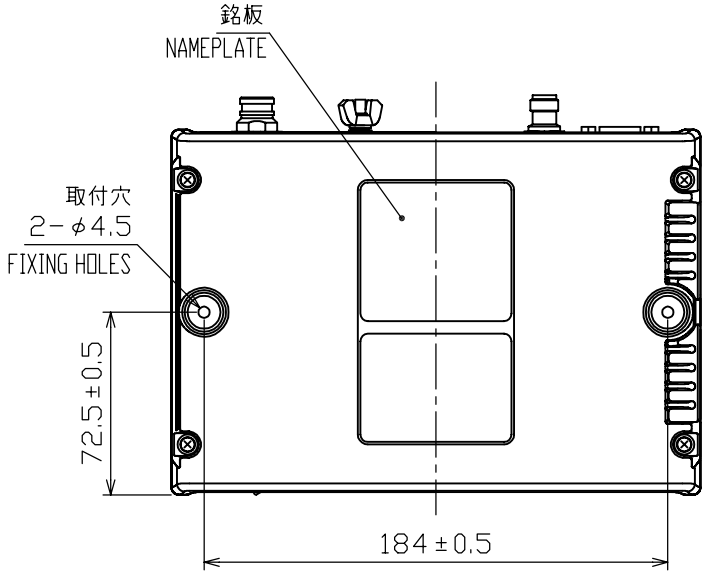

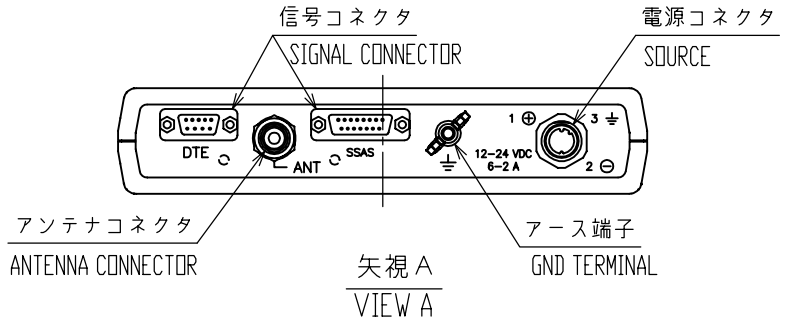

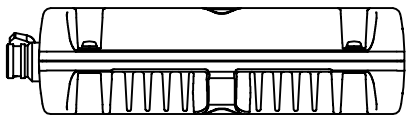

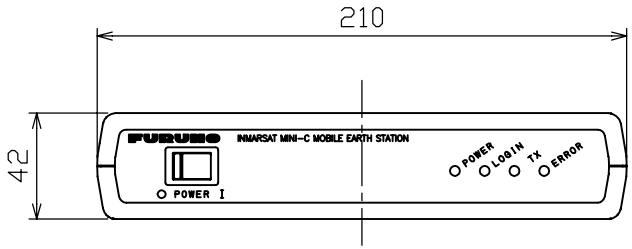

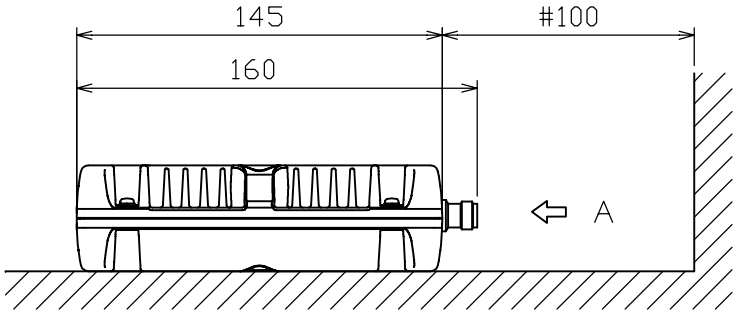

注　記

１）＃印寸法は最小サービス空間寸法とする。

２）指定外の寸法公差は表１による。

３）取付にはＭ４ボルト、または＋トラスタッピンネジ
　　呼び径４×４０を使用のこと。

NOTE

1. #: MINIMUM SERVICE CLEARANCE.
2. TABLE 1 INDICATES TOLERANCE OF DIMENSIONS WHICH IS NOT SPECIFIED.
3. USE M4 BOLTS OR TAPPING SCREWS 4x40 FOR FIXING THE UNIT.

DRAWN Feb. 9 '04 E. MIYOSHI			TITLE IC-216
CHECKED Takahashi T.			名称 通信制御ユニット
APPROVED Y. Hatai	FELCOM 16		外寸図
SCALE 1/3 MASS 1.2 ±10% kg			NAME COMMUNICATION UNIT
DWG No. C5638-G01- D	16-018-200G-3		OUTLINE DRAWING

D-2

FURUNO ELECTRIC CO., LTD.

FURUNO

表1 TABLE 1

寸法区分（mm） DIMENSION	公差（mm） TOLERANCE
L≦50	±1.5
50<L≦100	±2.5
100<L≦500	±3

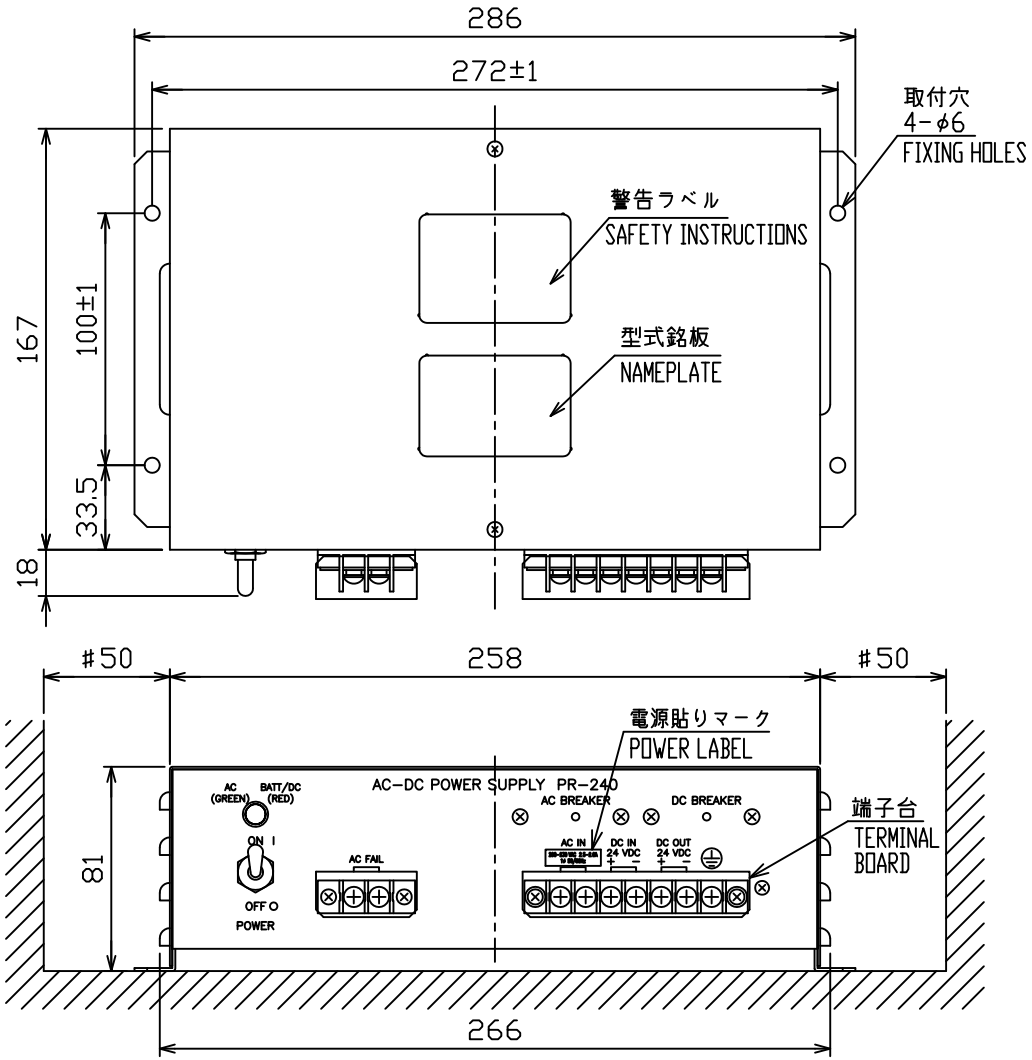

注　記　1）指定なき寸法公差は表1による。
　　2）#印寸法は最小サービス空間寸法とする。
　　3）取付用ネジは＋トラスタッピンネジ 呼び径4×16を使用のこと。

NOTE　1. TABLE 1 INDICATES TOLERANCE OF DIMENSIONS WHICH IS NOT SPECIFIED.
　　2. #: MINIMUM SERVICE CLEARANCE.
　　3. USE TAPPING SCREWS Ø4x16 FOR FIXING THE UNIT.

DRAWN 11/Dec/08 T.YAMASAKI			TITLE PR-240
CHECKED 11/Dec/08 T.TAKENO			名称 AC/DC電源ユニット
APPROVED 5/Feb/09 R.Esumi			外寸図
SCALE 1/3	MASS 3.2 ±10% kg		NAME AC/DC POWER SUPPLY UNIT
DWG No. C5003-G03-H		REF. No. 24-003-500G-4	OUTLINE DRAWING

D-3

FURUNO ELECTRIC CO., LTD.

FURUNO

D-4

表 1 TABLE 1

寸法区分（mm）DIMENSIONS	公差（mm）TOLERANCE
L≦50	±1.5
50<L≦100	±2.5
100<L≦500	±3

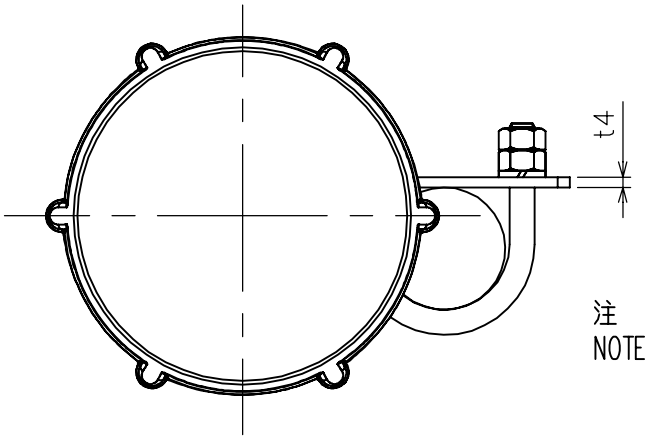

注　記　1）指定外の寸法公差は表 1 による。
NOTE　1.　TABLE 1 INDICATES TOLERANCE OF DIMENSIONS WHICH IS NOT SPECIFIED.

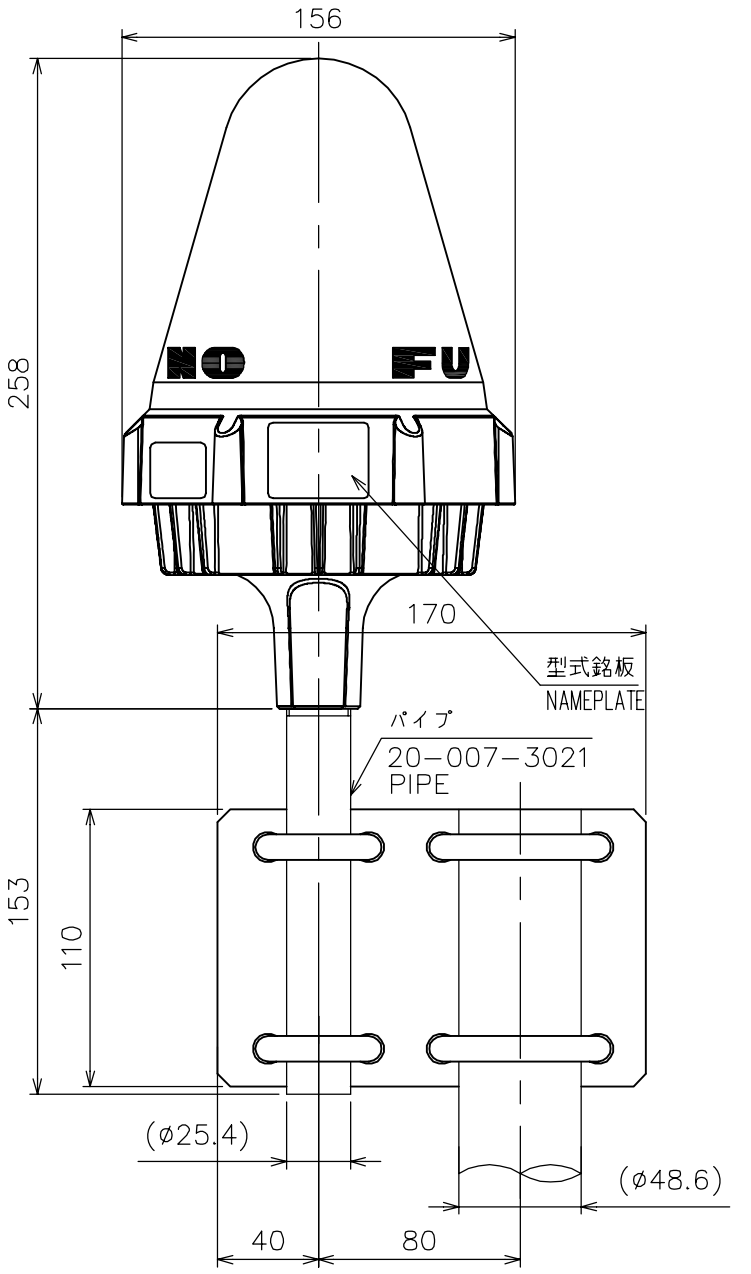

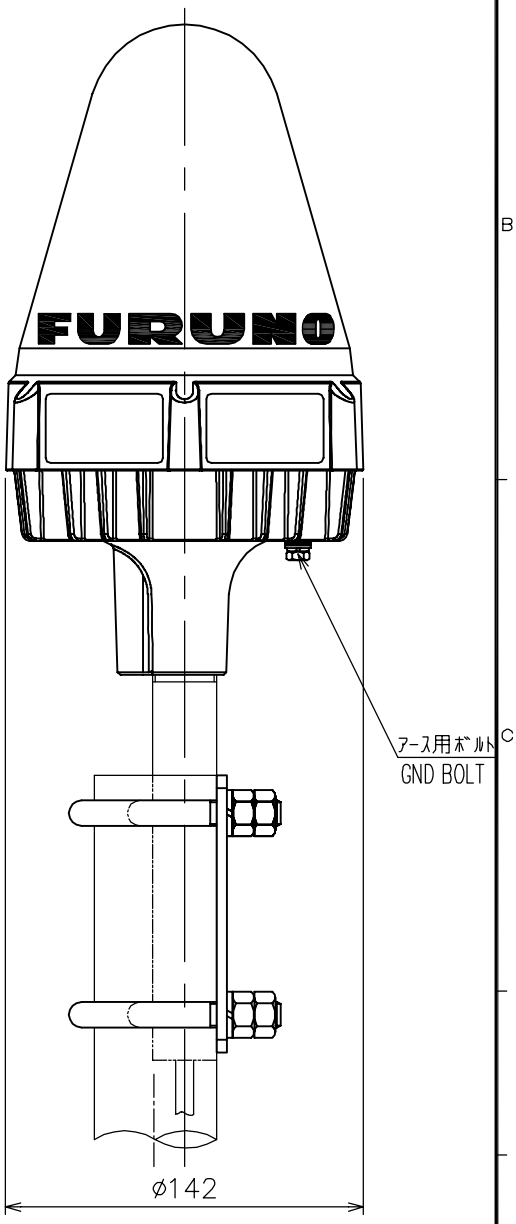

DRAWN Mar. 13, '06 E.MIYOSHI			TITLE IC-115/116
CHECKED TAKAHASHI.T			名称 アンテナユニット
APPROVED Y. Hatai	FELCOM 15/16		外寸図
SCALE 1/3	MASS 2.2 ±10% kg		NAME ANTENNA UNIT
DWG No. C5635-G19- A	16-018-101G-1		OUTLINE DRAWING

FURUNO ELECTRIC CO., LTD.

FURUNO

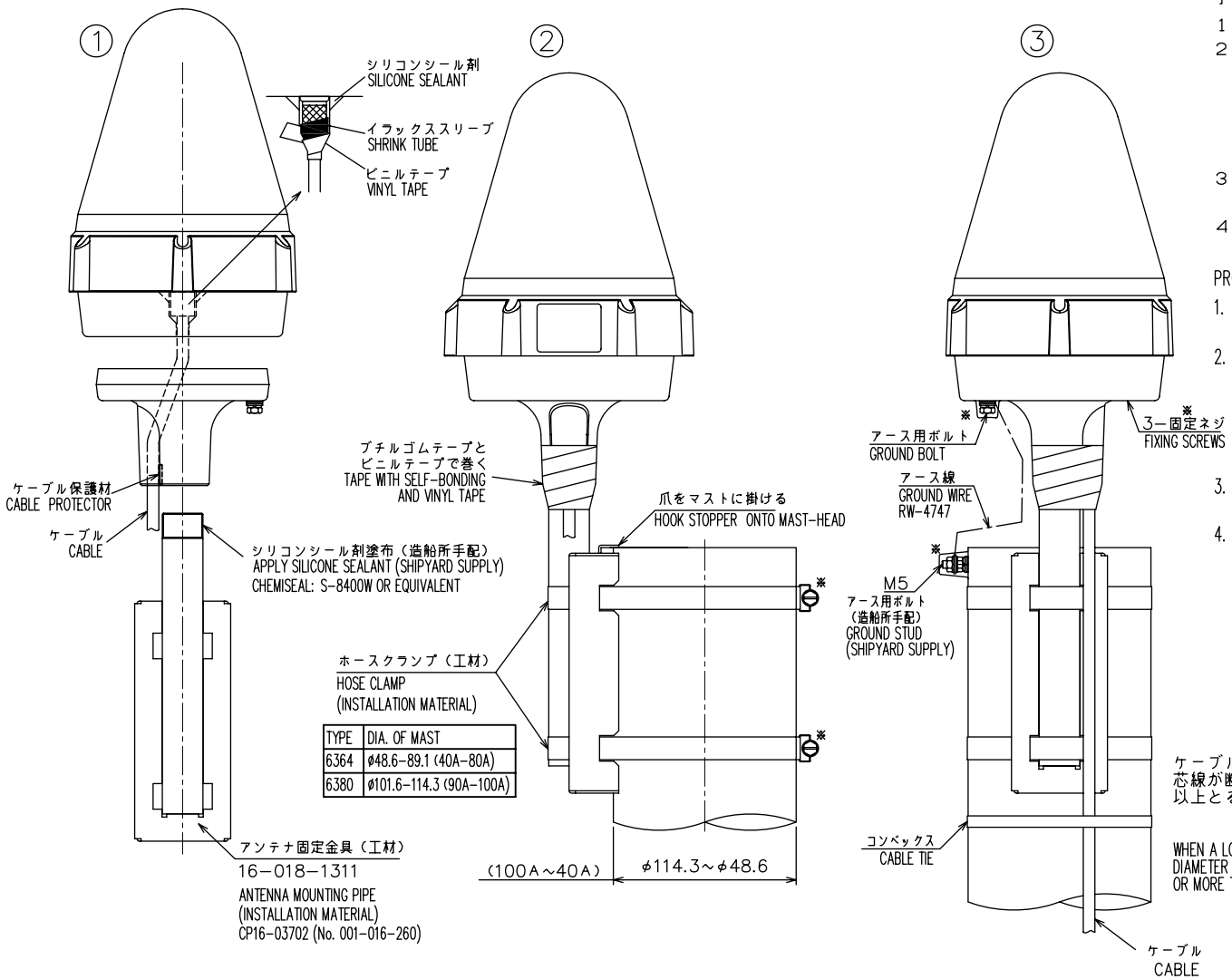

TYPE	DIA. OF MAST
6364	φ48.6-89.1 (40A-80A)
6380	φ101.6-114.3 (90A-100A)

手順

1）ケーブルをよけてアンテナ固定金具をアンテナユニットにねじ込む。
2）アンテナ固定具をホースクランプでマストに固定する。
　対応マスト径：40A（φ48.6）～100A（φ114.3）
　ホースクランプ（いずれか選択）
　6364: 40A（φ48.6）～80A（φ89.1）
　6380: 90A（φ101.6）～100A（φ114.3）
3）ケーブルをマストに固定し、アース線（工材）を布設する。
　ケーブル、アース線はコンベックスなどで固定する。
4）※部分をシール剤で完全に覆う。

PROCEDURE

1. SCREW THE ANTENNA MOUNTING PIPE INTO THE ANTENNA BASE.
   KEEP THE ANTENNA CABLE ASIDE TO AVOID INJURY.
2. FIX THE ANTENNA MOUNTING PIPE TO MAST BY HOSE CLAMP.
   MAST DIAMETER: 40A (φ48.6) ~100A (φ114.3)
   HOSE CLAMP (SELECT)
   6364: 40A (φ48.6) ~80A (φ89.1)
   6380: 90A (φ101.6) ~100A (φ114.3)
3. FIX THE ANTENNA CABLE AND GROUND WIRE.
   SECURE THEM WITH CABLE TIE.
4. COVER SCREW HEADS MARKED '※' WITH SILICONE SEALANT.

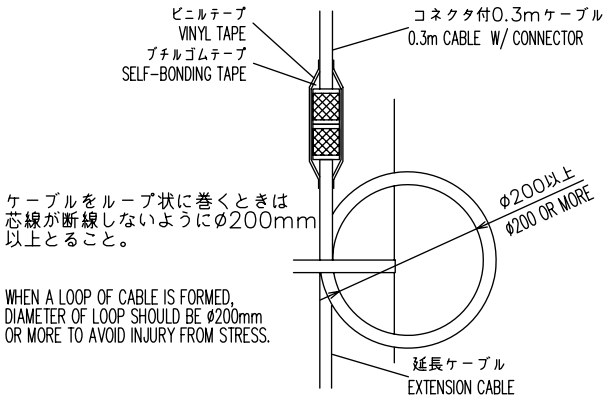

ケーブルをループ状に巻くときは
芯線が断線しないようにφ200mm
以上とること。

WHEN A LOOP OF CABLE IS FORMED,
DIAMETER OF LOOP SHOULD BE φ200mm
OR MORE TO AVOID INJURY FROM STRESS.

DRAWN	Jul. 18 '07 T.YAMASAKI		TITLE IC-115/116
CHECKED	Jul. 18 '07 T.TAKENO		名称 アンテナユニット（ホースクランプ取付）
APPROVED	Jul. 24' 07 R. Esumi	FELCOM 15/16	装備要領
SCALE	MASS ±10% kg		NAME ANTENNA UNIT (HOSE CLAMP FIXING)
DWG No.	C5635-Y01- C		INSTALLATION PROCEDURE

FURUNO ELECTRIC CO., LTD.

FURUNO

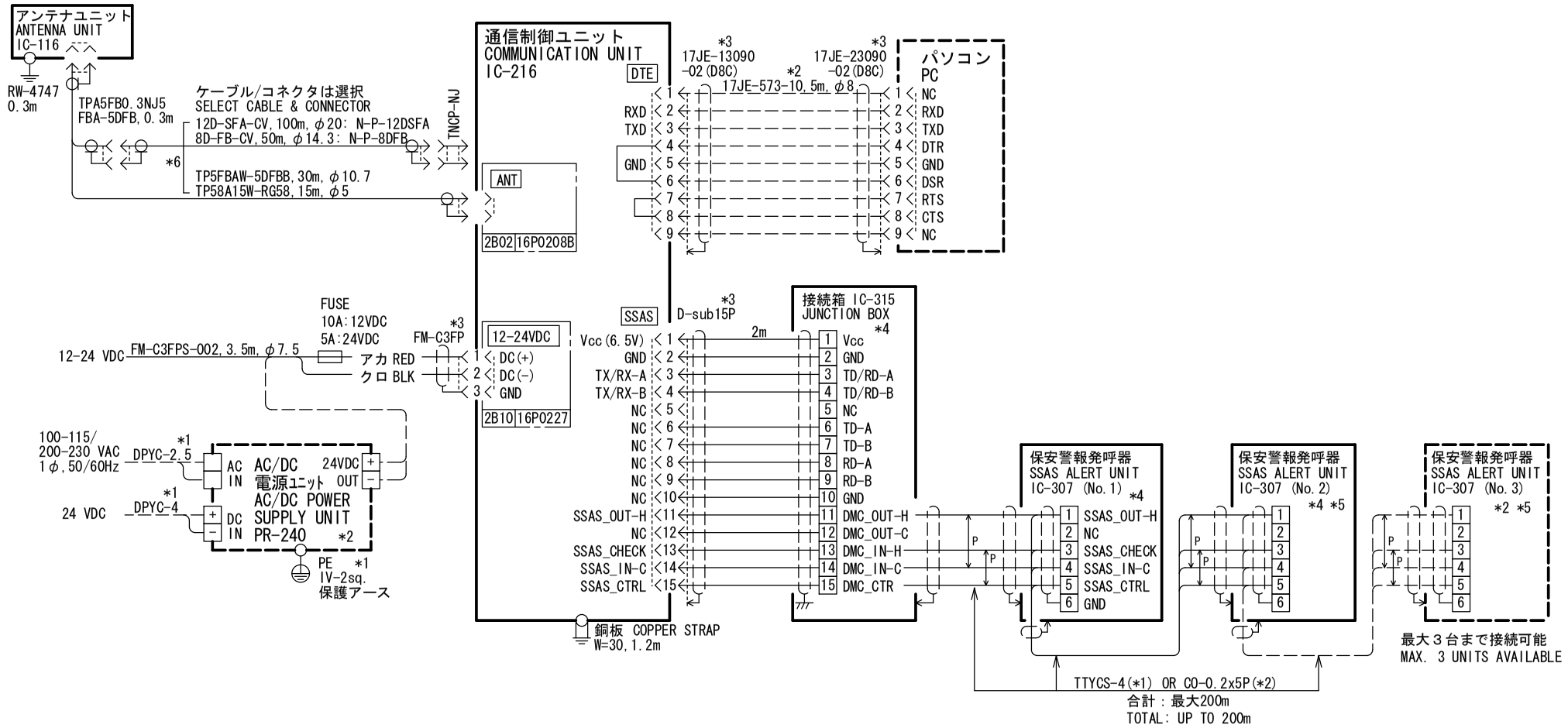

注記
＊１）造船所手配。
＊２）オプション。
＊３）工場にて取付済み。
＊４）SSAS仕様時標準支給。
＊５）終端のIC-307はジャンパー設定を変更する。
＊６）アンテナケーブルは切断して使用しないこと。

NOTE
*1. SHIPYARD SUPPLY.
*2. OPTION.
*3. FITTED AT FACTORY.
*4. STANDARD SUPPLY FOR SSAS SPEC.
*5. CHANGE SETTING OF JUMPER IN IC-307 TO TERMINATE.
*6. DO NOT SHORTEN ANTENNA CABLE.

CO-0.2x5P: CO-SPEVV-SB-C 0.2x5P,φ13.5

DRAWN Apr. 24 '07 T.YAMASAKI		TITLE	FELCOM 16
CHECKED Apr. 24 '07 T.TAKENO		名称	インマルサットMINI-C携帯移動地球局
APPROVED May.9'07 R.Esumi			相互結線図
SCALE / MASS kg		NAME	INMARSAT MINI-C MES
DWG No. C5638-C01- K			INTERCONNECTION DIAGRAM

S-1

FURUNO ELECTRIC CO., LTD.

ECF
(Elemental Chlorine Free)
The paper used in this manual
is elemental chlorine free.

FURUNO ELECTRIC CO., LTD.

9-52 Ashihara-cho,
Nishinomiya, 662-8580, JAPAN

Telephone : +81-(0)798-65-2111
Fax : +81-(0)798-65-4200

• FURUNO Authorized Distributor/Dealer

All rights reserved.

Printed in Japan

A : MAR. 2003
D7 : MAR. 23, 2009

Pub. No. IME-56380-D7

(TATA) FELCOM16

0008093471 3